ISS	MN/PRN/DN	ACTION	APPROVED	DATE
A	-	PN	LUD	MAR 18

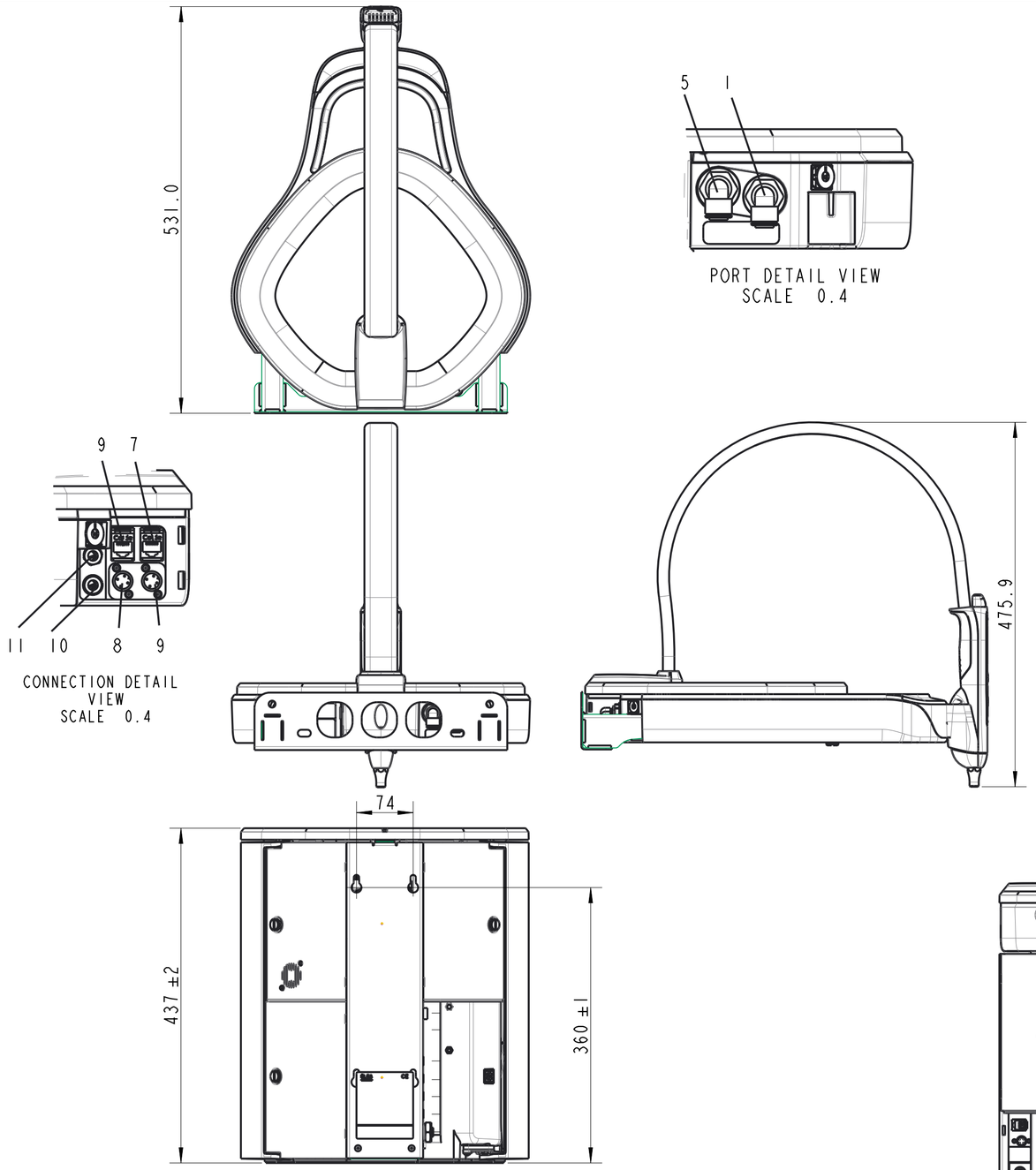

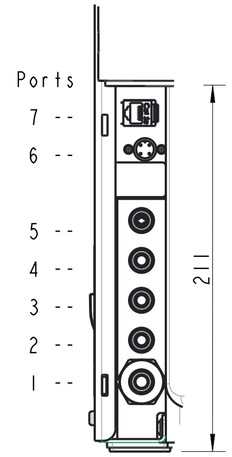

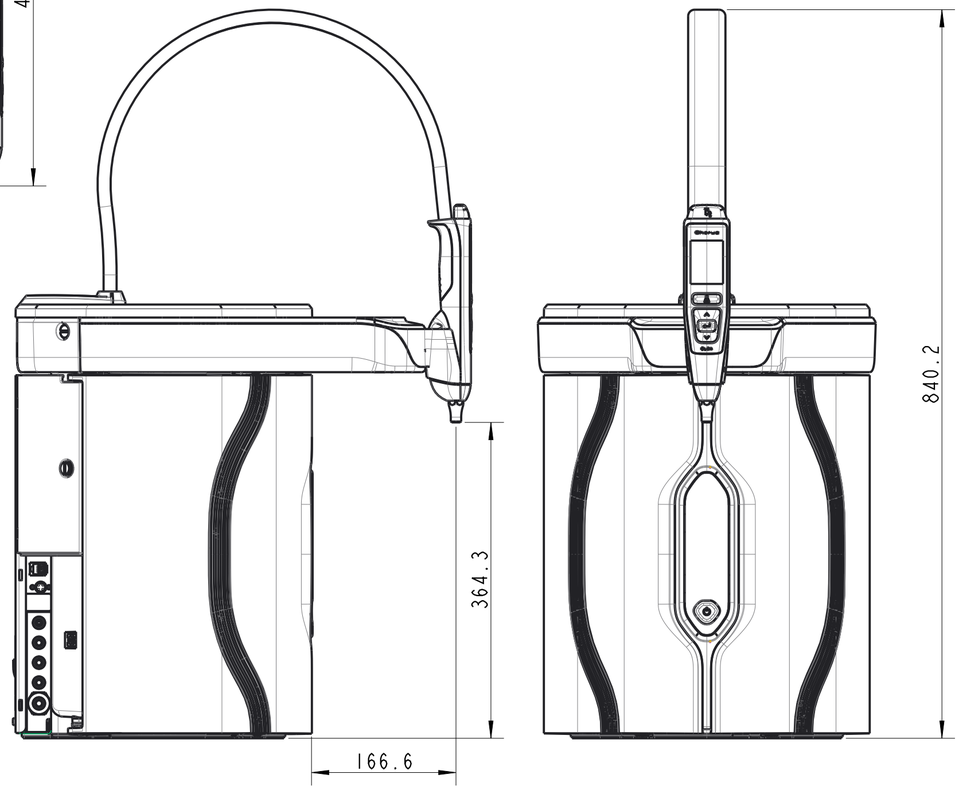

SCALE 0.125

ELECTRICAL		CONNECTIONS		
MAINS INPUT	100-240Vac 50-60Hz	PORT 1	WATER INLET	8MM (5/16") OUTSIDE TUBE DIAMETER
SYSTEM VOLTAGE	24Vdc	PORT 2	MANUAL BYPASS	8MM (5/16") OUTSIDE TUBE DIAMETER
POWER CONSUMPTION CHORUS 1, 2, 3 (PEAK)	60VA (PER MODULE)	PORT 3	DRAIN OUTLET	8MM (5/16") OUTSIDE TUBE DIAMETER
		PORT 4	PURIFIED WATER OUTLET	8MM (5/16") OUTSIDE TUBE DIAMETER
POWER CONSUMPTION HALO DISPENSER (PEAK)	20VA (PER MODULE)	PORT 5	RETURN WATER	8MM (5/16") OUTSIDE TUBE DIAMETER
		PORT 6	ELECTRICAL POWER INLET	ELECTRICAL CONNECTIONS. ONLY USE ELGA APPROVED POWER AND NETWORK LEADS.
WEIGHT		PORT 7	NETWORK CONNECTION	
CHORUS 1 or 2, or 3	19Kg (42Lb)	PORT 8	ELECTRICAL POWER LINK	
HALO DISPENSER	4Kg (9Lb)	PORT 9	NETWORK CONNECTION	
CHORUS AND HALO INTEGRATED	23Kg (51Lb)	PORT 10	FOOTSWITCH CONNECTION	6.35mm (1/4") JACK SOCKET
		PORT 11	BUILDING MANAGEMENT OUTPUT	6.35mm (1/4") JACK SOCKET

THIS DRAWING HAS BEEN CREATED USING CREO PARAMETRIC SOFTWARE. THE MASTER FILE IS STORED WITHIN THE WINDCHILL PDMLINK DATABASE.

IF IN DOUBT - ASK

UNCONTROLLED

Please check issue before use

3rd ANGLE PROJECTION DO NOT SCALE

MATERIAL: --
--

FINISH: --
--

GENERAL NOTE: REMOVE ALL BURRS & SHARP EDGES

TOLERANCES UNLESS STATED:
ONE PLACE DEC. ± 1.0
TWO PLACE DEC. ± 0.01
ANGULAR ± 1.0°
ALL HOLE TOLS. TO BS.4500 H11

DIMS. IN	SCALE			
mm	0.200	DRAWN	PN	14/03/2018
		CHECKED	LUD	14/03/2018
		APPROVED	LUD	14/03/2018

DATE

TITLE:
SALES DIAGRAM
HALO DISPENSER INTEGRATED
OUTLINE AND CONNECTION
DETAILS

PART NUMBER: SD.CHORUS.PLUS.FLEX

ELGA VEOLIA

ELGA LABWATER
Lane End Industrial Park
High Wycombe
Bucks, HP14 3BY, UK
Tel +44 (0) 203 567 7300
Fax +44 (0) 203 567 7305
service@elgalabwater.com
ELGA LabWater is a brand name of VWS (UK) Ltd

DRG. NO: SD.CHORUS.PLUS.FLEX

ISSUE A

SHEET No. 1 OF 2

THIS DRAWING IS THE PROPERTY OF ELGA LabWater. THE DETAILS SHOWN ARE STRICTLY CONFIDENTIAL AND MUST NOT BE DISCLOSED TO ANY THIRD PARTY WITHOUT THE CONSENT OF VWS (UK) LTD.

ISS	MN/PRN/DN	ACTION	APPROVED	DATE
A	-	PN	LUD	MAR 18

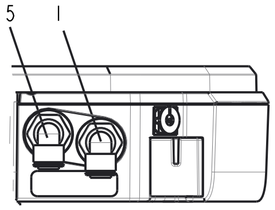

PORT DETAIL VIEW
SCALE 0.4

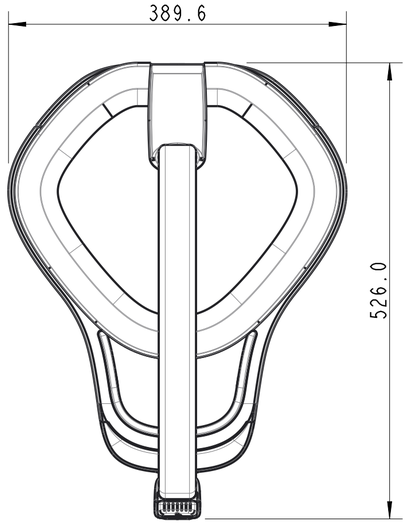

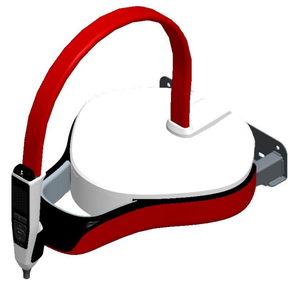

SCALE 0.125

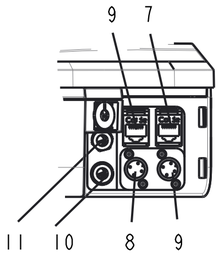

CONNECTION DETAIL
VIEW
SCALE 0.4

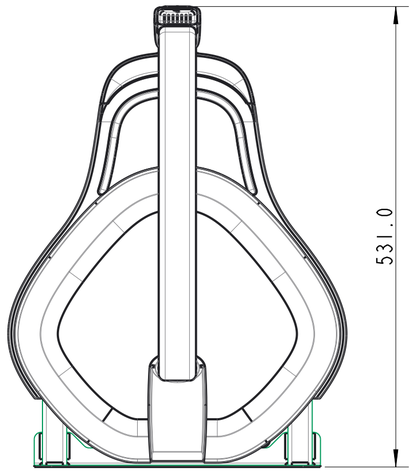

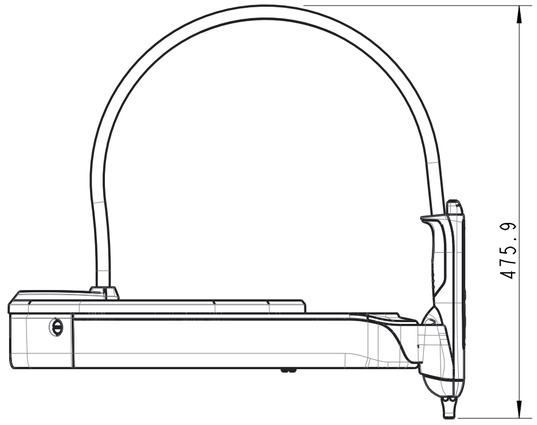

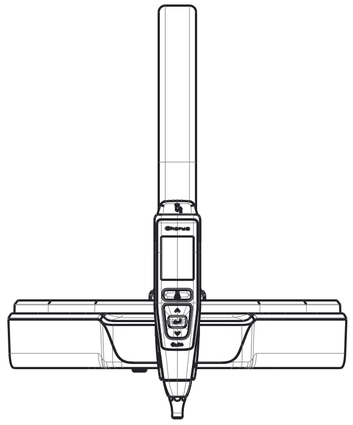

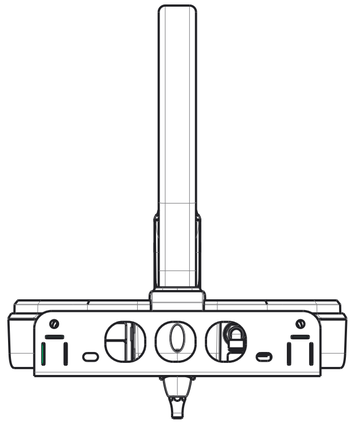

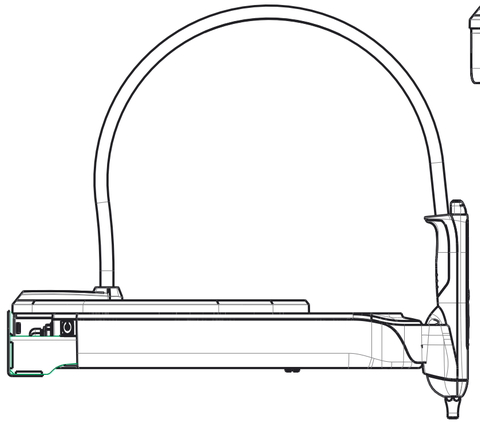

ELECTRICAL		CONNECTIONS		
MAINS INPUT	100-240Vac 50-60Hz	PORT 1	WATER INLET	8MM (5/16") OUTSIDE TUBE DIAMETER
SYSTEM VOLTAGE	24Vdc	PORT 2	MANUAL BYPASS	8MM (5/16") OUTSIDE TUBE DIAMETER
POWER CONSUMPTION CHORUS 1, 2, 3 (PEAK)	60VA (PER MODULE)	PORT 3	DRAIN OUTLET	8MM (5/16") OUTSIDE TUBE DIAMETER
		PORT 4	PURIFIED WATER OUTLET	8MM (5/16") OUTSIDE TUBE DIAMETER
POWER CONSUMPTION HALO DISPENSER (PEAK)	20VA (PER MODULE)	PORT 5	RETURN WATER	8MM (5/16") OUTSIDE TUBE DIAMETER
		PORT 6	ELECTRICAL POWER INLET	ELECTRICAL CONNECTIONS. ONLY USE ELGA APPROVED POWER AND NETWORK LEADS.
WEIGHT		PORT 7	NETWORK CONNECTION	
CHORUS 1 or 2, or 3	19Kg (42Lb)	PORT 8	ELECTRICAL POWER LINK	
HALO DISPENSER	4Kg (9Lb)	PORT 9	NETWORK CONNECTION	
CHORUS AND HALO INTEGRATED	23Kg (51Lb)	PORT 10	FOOTSWITCH CONNECTION	6.35mm (1/4") JACK SOCKET
		PORT 11	BUILDING MANAGEMENT OUTPUT	6.35mm (1/4") JACK SOCKET

THIS DRAWING HAS BEEN CREATED USING CREO PARAMETRIC SOFTWARE. THE MASTER FILE IS STORED WITHIN THE WINDCHILL PDMLINK DATABASE.

IF IN DOUBT - ASK

UNCONTROLLED

Please check issue before use

3rd ANGLE PROJECTION DO NOT SCALE

MATERIAL: --
--

FINISH: --
--

GENERAL NOTE: REMOVE ALL BURRS & SHARP EDGES

TOLERANCES UNLESS STATED:
ONE PLACE DEC. ± 1.0
TWO PLACE DEC. ± 0.01
ANGULAR ± 1.0°
ALL HOLE TOLS. TO BS.4500 H11

DIMS. IN	SCALE			DATE
mm	0.200	DRAWN	PN	14/03/2018
		CHECKED	LUD	14/03/2018
		APPROVED	LUD	14/03/2018

TITLE:
SALES DIAGRAM
HALO DISPENSER INTEGRATED
OUTLINE AND CONNECTION
DETAILS

PART NUMBER: SD_CHORUS_PLUS_FLEX

ELGA VEOLIA

ELGA LABWATER
Lane End Industrial Park
High Wycombe
Bucks, HP14 3BY, UK
ELGA LabWater is a brand name of VWS (UK) Ltd
Tel +44 (0) 203 567 7300
Fax +44 (0) 203 567 7305
service@elgalabwater.com

DRG. NO: SD_CHORUS_PLUS_FLEX

ISSUE A

SHEET No. 2 OF 2

THIS DRAWING IS THE PROPERTY OF ELGA LabWater. THE DETAILS SHOWN ARE STRICTLY CONFIDENTIAL AND MUST NOT BE DISCLOSED TO ANY THIRD PARTY WITHOUT THE CONSENT OF VWS (UK) LTD.