ELGA VEOLIA

# PURELAB® Quest


*Operator Manual*

*MANU41196 VERSION 02 2/20*

*Product No. PQDIUVM1*

*Product No. PQDIXXM1*

**WATER PURIFICATION**

ELGA VEOLIA

# QUICK START GUIDE — ENGLISH

## WELCOME

Thank you for purchasing the PURELAB® QUEST. Please read the following Health and Safety notice before proceeding.

## HEALTH & SAFETY

Please follow the safety information detailed in this instruction sheet. Failure to observe these instructions could result in damage to the equipment and associated equipment resulting injury or death.

**1. Electricity**

**WARNING!**
POSITION THE POWER SUPPLY SO THAT IT CANNOT COME INTO CONTACT WITH WATER.

**2. Ultraviolet Light**

**WARNING!**
UNDER NO CIRCUMSTANCES SHOLD THE LAMP BE CONNECTED AND ACTIVATED WHEN OUTSIDE THE UV HOUSING.
EXPOSURE COULD CAUSE SERIOUS INJURY TO EYES ANDS SKIN.

**3. Residual Preservative**

**WARNING!**
DURING THE COMMISSIONING CYCLE TRACES OF RESIDUAL PRESERVATIVE ARE FLUSHED FROM THE SYSTEM. COSHH MATERIAL SAFETY DATA SHEET ARE AVAILABLE UPON REQUEST.

**Control Of Substance Hazardous to Health (COSHH).**

ELGA Veolia
Tel: +44 (0) 203 567 7300 Fax: +44 203 567 7205
Email: info@elgalabwater.com Website: www.elgalabwater.com
Unit 10 Lane End Industrial Park, Lane End, High Wycombe HP14 3BY




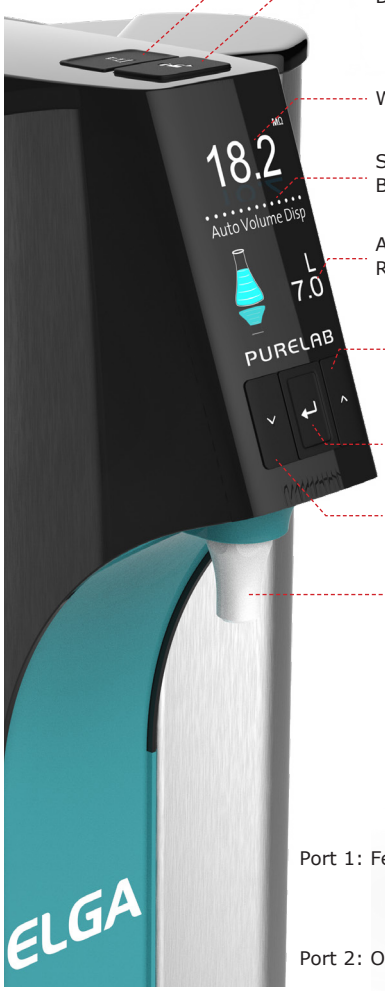


# SYSTEM CONFIGURATION

Example 1: 1 X PURELAB® QUEST RO/DI/UV or RO/DI - Wall Mounting Bracket LA735 - LA648 Boost Pump

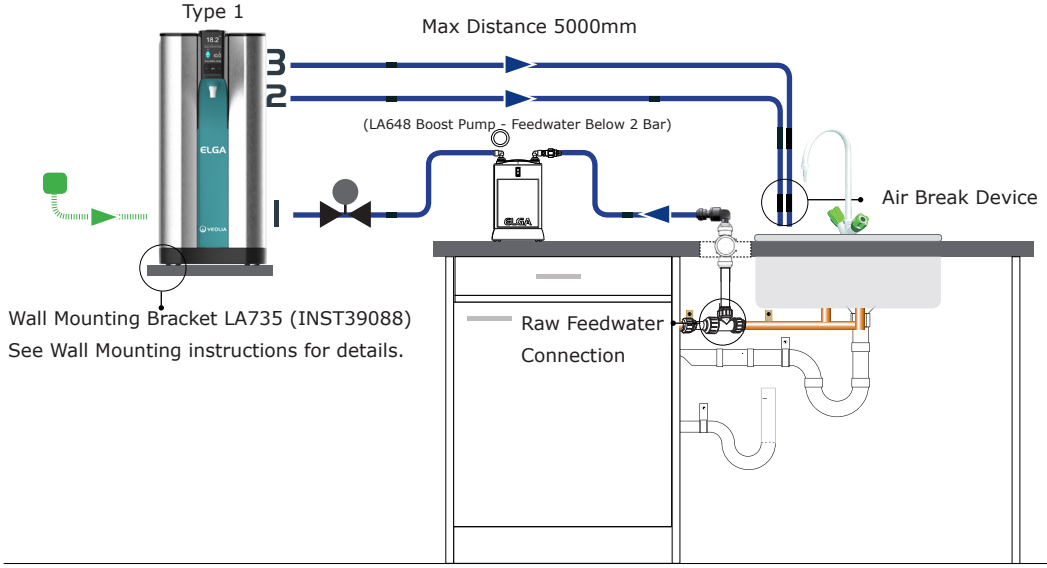


| Key | |
|---|---|
| COMMS | |
| Power | |
| Water | |
| Valve | |
| Regulator LA512 | |
| 8mm Flow Bend | |
| 8mm Tube Clip | |

Quest Port 1: Feedwater
Quest Port 2: Overflow
Quest Port 3: Drain

Example 2: 1 X PURELAB® QUEST RO/DI/UV or RO/DI and 15L or 30L Reservoir LA757 / LA758.

Quest Port 1: Feedwater
Quest Port 2: Overflow
Quest Port 3: Drain
Quest Port 5: Type 3 Outlet

Reservoir Port 1: Inlet
Reservoir Port 4a: Outlet
Reservoir Comms: J2

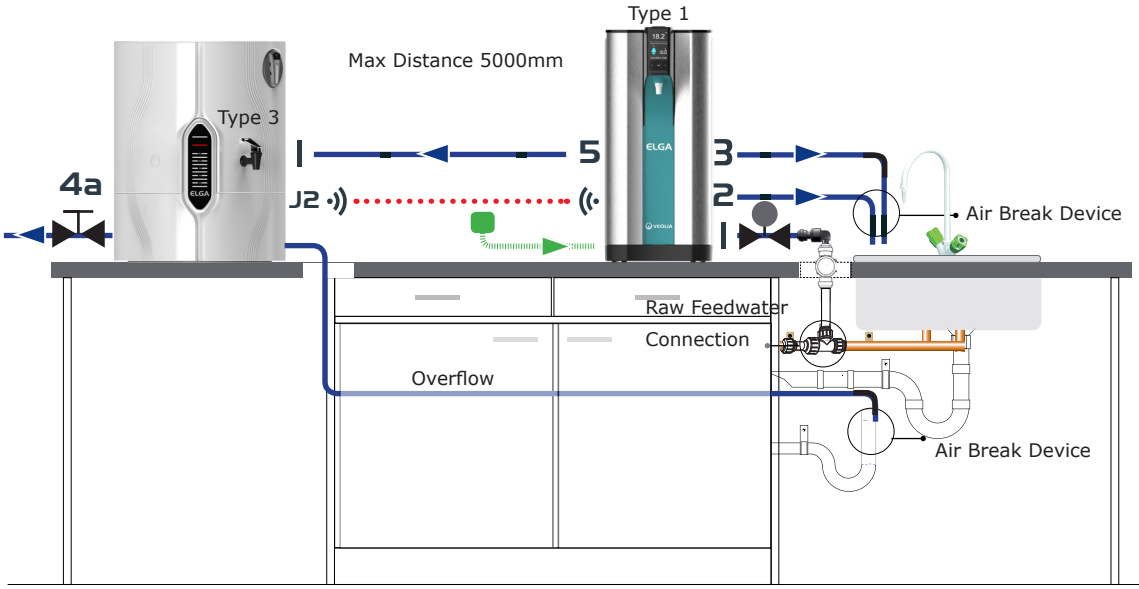


Example 3: 1 X PURELAB® QUEST RO/DI/UV or RO/DI and Free-standing Dispenser.

Quest Port 1: Feedwater
Quest Port 2: Overflow
Quest Port 3: Drain
Quest Port 5: Type 3 Outlet
Quest Port 6: Dispenser Return
Quest Port 7: Dispenser Outlet

Dispenser Port 1: Inlet
Dispenser Port 5: Return

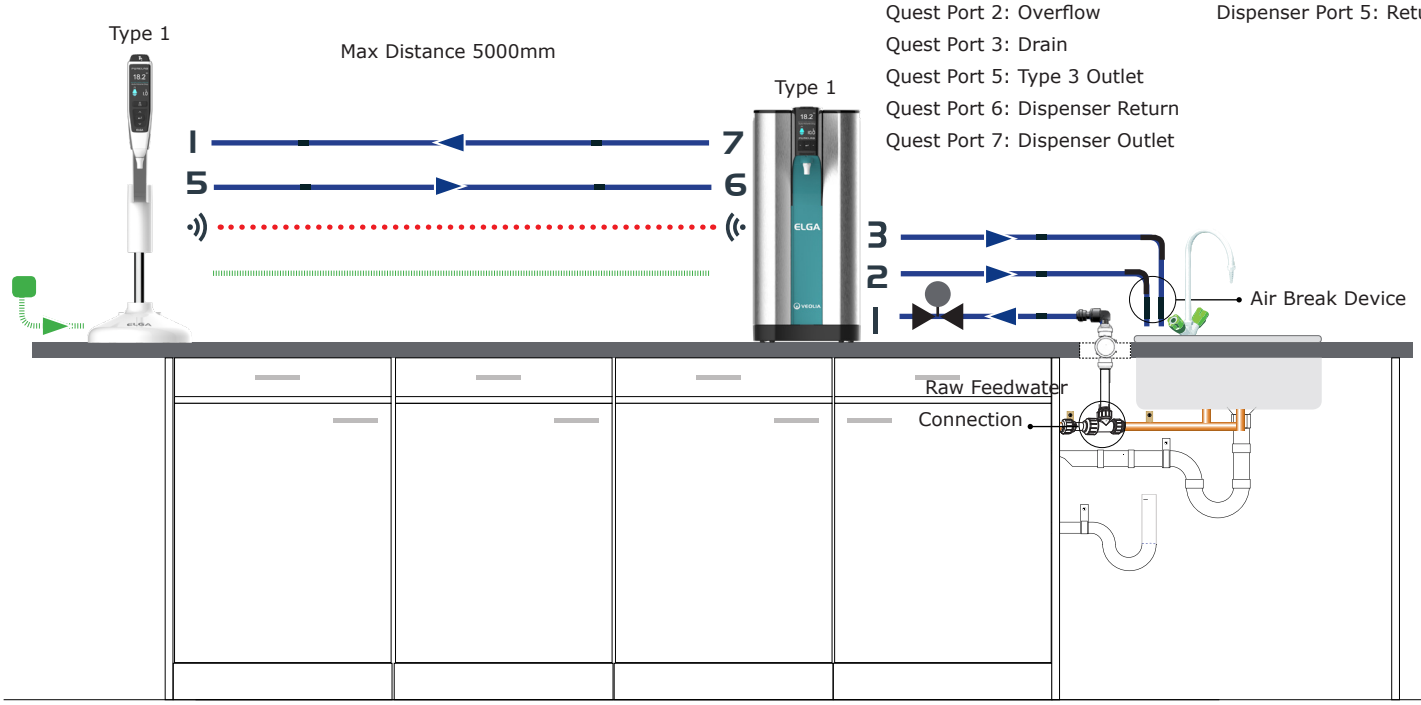

# SET - UP / COMMISSIONING

## POSITIONING PURELAB® QUEST

The PURELAB® QUEST unit should be installed on a flat, level surface, in a clean dry environment 15 - 25 °C. The unit can also be wall mounted using the LA735 wall mounting kit against a vertical wall capable of supporting the combined weight of the unit and mounting kit.

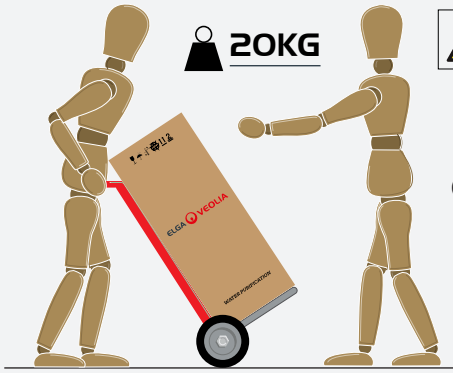


**CAUTION!** Must be lifted by two people.

(Fig.1)

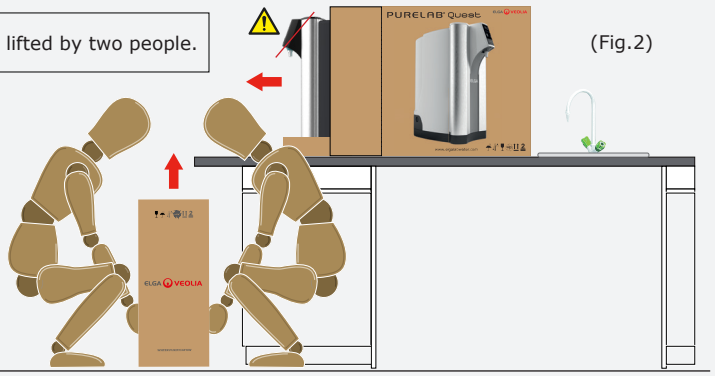


(Fig.2)

a) Use lifting aids to move the product into position. (Fig.1)

b) Place the product on a flat level surface, remove from the packaging. (Fig.2)

Health and Safety Executive, INDG143 (REV 3), Open Government License.

## 2 RECOMMENDED MAINS FEEDWATER CONNECTION

**Temperature 10 - 25°C / Minimum Pressure 2.0 bar - 30 psi (<2 Bar install LA648), Optimum Running Pressure 4.0 bar - 60 psi, Maximum Pressure 6.0 bar - 90 psi. (Regulate to 4 bars using LA512).**

**SUPPLY INSTALLED BY A COMPETENT PERSON ONLY.** SERVICE ENGINEER OR FACILITIES MANAGER.

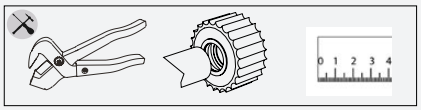

a) ISOLATE the water supply to the sink (Potable water supply).

b) Cut the 15mm copper or plastic inlet water pipe with a suitable 15mm tube cutter.

(Fig.3)

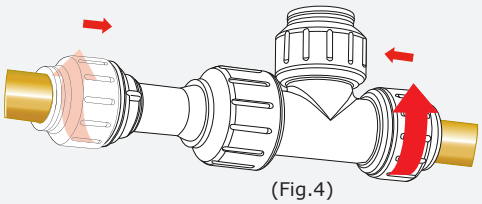

(Fig.4)

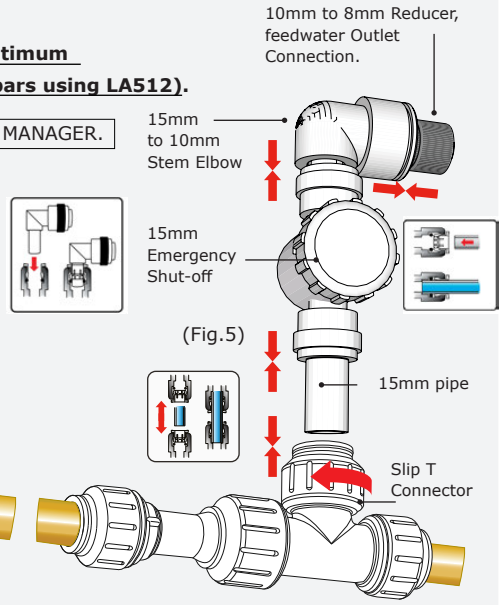


(Fig.5)

c) CONNECT: Attach a 15mm John Guest Slip Tee Connector to both ends of the cut pipe, ensuring that it is fully connected. push until it stops (Fig.3)

d) LOCKING: Twist the screw cap until the cap meets the body of the Slip Tee Connector. Pull to check the connection is secure. (Fig.4)

e) ASSEMBLE the above parts, this will be for the Feedwater connection for Port 1. (Fig.5)

## 3 RECOMMENDED DRAIN AND OVERFLOW CONNECTIONS

**The drain and overflow tubes will require a drain or a sink capable of handling at least 1.5L / Min with a gravity fall below the level of the unit. Any connections directed to drain or sink should have an air-break device fitted.**

a) Use 6 X flow bends from the basic installation kit LA762.

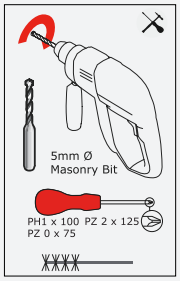


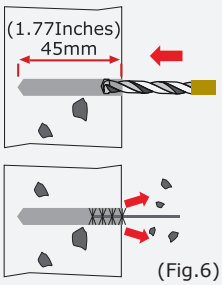


(Fig.6)

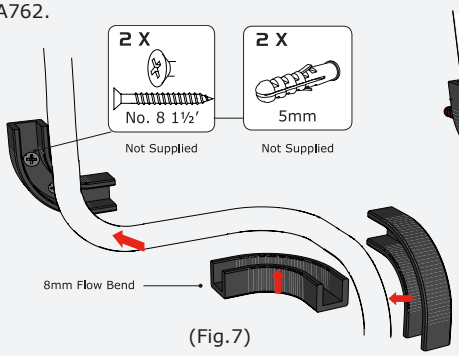


(Fig.7)

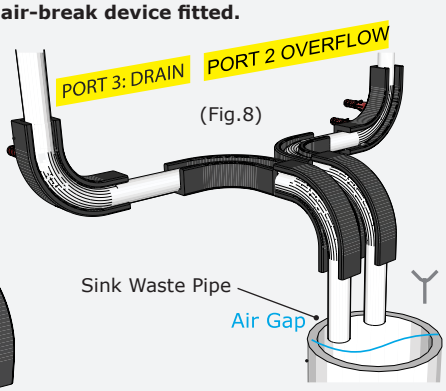


(Fig.8)

b) Fix 8mm flow bends to the wall if required. (Fig.6)

c) Clip in the 8mm pipe. (Fig.7)

d) Example of an air-break device. (Fig.8)

# SET - UP / COMMISSIONING

## 4 CONNECT THE WATER

RO/DI/UV - Potable Water Supply
RO/DI - Potable Water Supply
See Operator's Manual - Feedwater Specifications for more information.


(Fig.9)

Fit a pressure regulator LA512, regulate to 4 bar.

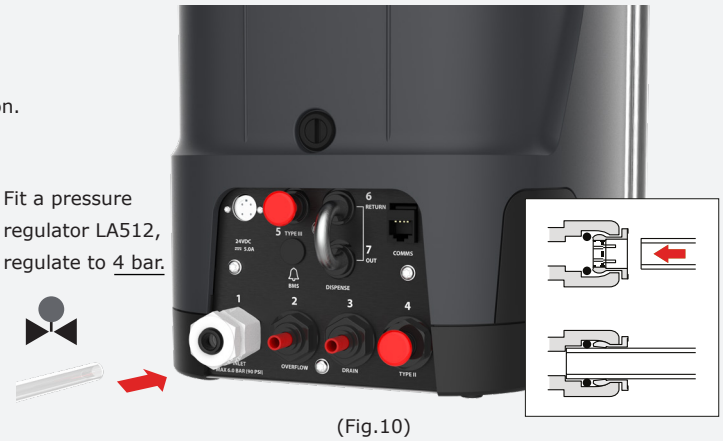

(Fig.10)

a) Remove the transit plug from the water inlet connection. (Fig.9)

b) Using the tube supplied, firmly push one end securely into the water inlet connection. (Fig.10)

## 5 CONNECT THE OVERFLOW


(Fig.11)

(Fig.12)

a) Remove the transit plug from the Overflow connection. (Fig.11)

b) Using the tube supplied, firmly push one end securely into the Overflow connection. (Fig.12)

## 6 CONNECT THE DRAIN


(Fig.13)

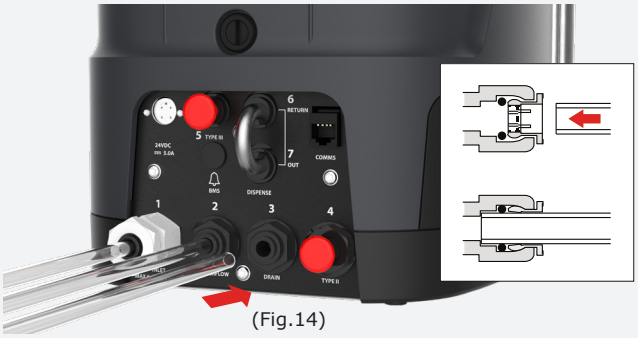

(Fig.14)

a) Remove the transit plug from the Drain connection. (Fig.13)

b) Using the tube supplied, firmly push one end securely into the Drain connection. (Fig.14)

Connect the other end of the drain and overflow tubes to a sink or suitable drain capable of handling at least 90L/hr.
The drain point should have a gravity fall below the level of the unit and any connections directed to drain should have an air break device fitted.
**(See Quick Start Guide - Step 3 for details)**

**C. Turn on the Feedwater supply, open 15mm emergency shut-off valve and regulator the pressure to 4 bars.**

## 7 ADDITIONAL PURIFIED WATER OUTLET CONNECTIONS

Ports 4,5,6 and 7 do not need to be connected for a standard installation (See Operator's manual - Section 6 for details).

# SET - UP / COMMISSIONING

## 8 CONNECT THE POWER

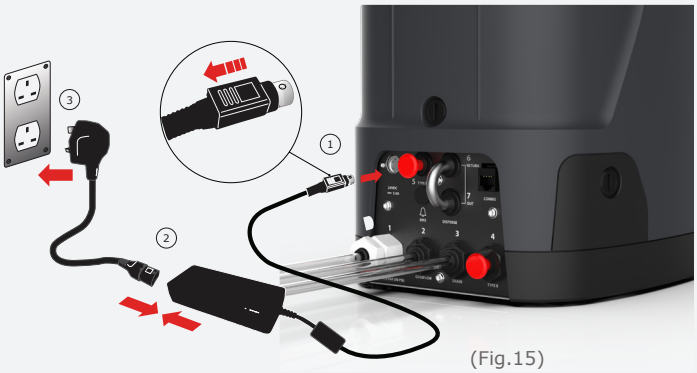


(Fig.15)


(Fig.16)

a) Connect the power cable as shown. (Fig.15)

b) Only use the power supply provided by ELGA.
The power supply and electrical feed must be earthed.

c) Turn on the power supply,
the screen will as shown. (Fig.16)

**WARNING!** CAREFULLY POSITION THE POWER SUPPLY, AVOIDING WATER CONTACT.

## 9 LANGUAGE


(Fig.17)

a) Scroll to find your language.


(Fig.18)

b) Press to accept to confirm.

## 10 FOLLOW THE ON SCREEN INSTRUCTIONS

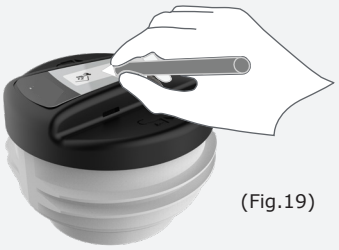

(Fig.19)

a) Write the installation date. (Fig.19)

(Fig.20)

b) Insert LC291 Vent Filter and turn clockwise until hand tight only. (Fig.20)


(Fig.21)

c) Open the right-hand door. (Fig.21)

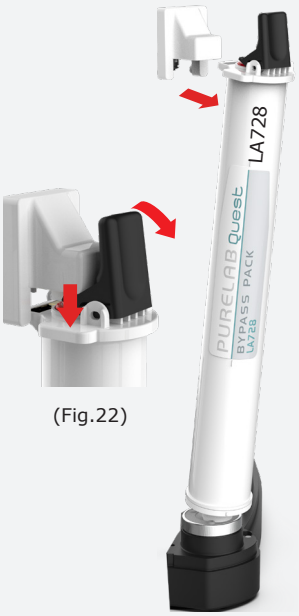


(Fig.22)

d) Remove Bypass Pack LC728.
(Fig.22)


(Fig.23)

e) Remove LC292 transit caps.
(Fig.23)


(Fig.24)

f) Fit LC292 and follow
the on screen instructions. (Fig.24)

**g) Please wait for PURELAB® QUEST 7L internal reservoir to fill and reach full purity before dispensing any purified water.**
**If an addtional external reservoir is also connected this will start to fill once the internal reservoir is full.**

ELGA VEOLIA

# CONTENT

# I. HEALTH AND SAFETY NOTICES

## HEALTH AND SAFETY NOTES

WARNING!
Please follow the safety information detailed in this instruction sheet. Failure to observe these instructions could result in damage to the equipment, process, associated equipment and injury or death to persons.

Caution!
Failure to observe the instructions could result in damage to the equipment.

1.1 Environment

Caution!
Clean dry indoor. Temp 5-40°c. Humidity max 80%, non-condensing.

Caution!
The PURELAB® QUEST is not designed for use in fume cupboards where chemicals could damage the system.

1.2 Electricity

The appliance coupler (mains lead) or power supply connected to the rear of the unit can be removed to isolate the power supply. If access to this is restricted then it is recommended that access to the mains socket is easily available to disconnect the power supply.

WARNING!
ONLY USE THE APPLIANCE COUPLER (MAINS LEAD) AND POWER SUPPLY PROVIDED, USE OF THESE WILL ENSURE ADEQUATE EARTH PROTECTION. DISCONNECT ELECTRICAL MAINS POWER SUPPLY BEFORE ANY MAINTENANCE WORK IS STARTED. IF THE EQUIPMENT IS USED IN A MANNER NOT SPECIFIED BY ELGA VEOLIA®, THE PROTECTION PROVIDED BY THE EQUIPMENT MAY BE IMPAIRED.

WARNING!
ALWAYS ENSURE THAT THE ELECTRICAL MAINS POWER SUPPLY IS ISOLATED BEFORE WORKING INSIDE.

1.3 Ultraviolet Light

WARNING!
UNDER NO CIRCUMSTANCES SHOULD THE UV LAMP BE CONNECTED AND ACTIVATED WHEN OUTSIDE THE HOUSING. EXPOSURE COULD CAUSE SERIOUS INJURY TO EYES AND SKIN.
ENSURE UV LAMP IS DISPOSED OF IN ACCORDANCE WITH LOCAL REGULATIONS.

1.4 Residual Biostat

WARNING!
DURING THE COMMISSIONING CYCLE TRACE RESIDUAL BIOSTAT IS FLUSHED FROM THE SYSTEM.
COSHH MATERIAL SAFETY DATA SHEET ARE AVAILABLE UPON REQUEST.

1.5 Personal Protective Equipment (PPE)

WARNING!
MAINTENANCE MUST BE CARRIED OUT WITH PROPER PROTECTIVE EQUIPMENT THAT INCLUDES STERILE LATEX - NITRILE GLOVES CAT 3 AND SAFETY GLASSES WHEN HANDLING GLASS CONSUMABLES.

1.6 Control of Substances Hazardous to Health (COSHH)

Material safety data sheets covering the Purification Packs are available upon request.
Note: Ensure the consuambles are disposed of in accordance with local regulations.

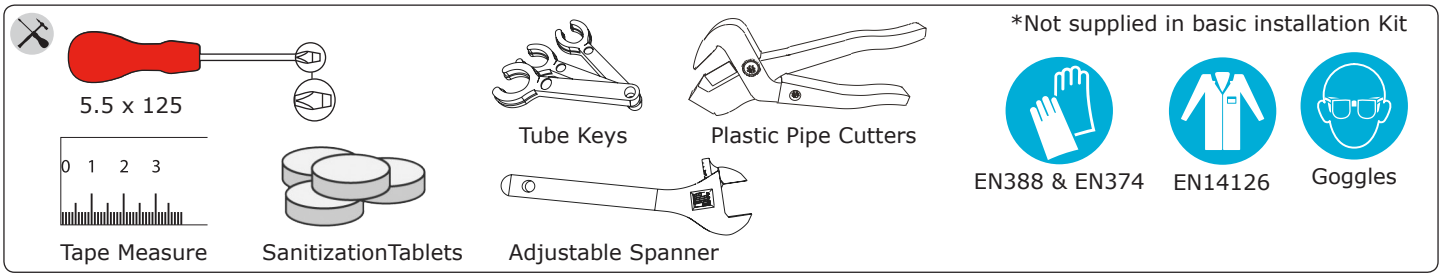

# INTRODUCTION

## 2.1 Health & Safety

Please ensure you read the Health & Safety notes in the front of this Operator Manual.

## 2.2 Product Range

This Operator manual has been prepared for PURELAB® Quest product models:

- PURELAB® Quest RO/DI/UV Product No. PQDIUVM1
- PURELAB® Quest RO/DI Product No. PQDIXXM1

PURELAB® Quest converts tap water directly to Type 1, 2 and 3 lab water. The unit is specifically designed for low volume applications and the intermittent demand of the modern laboratory.

## 2.3 Use of this Manual

This manual guides you through the operation and maintenance of PURELAB® QUEST allowing you to obtain a guaranteed supply of purified water to meet your requirements.

## 2.4 Installation

The Quick Start Guide shown in the front of this manual shows you how to install and commission the PURELAB® QUEST.

## 2.5 Environment

The PURELAB® Quest unit should be installed on a flat, level surface, in a clean, dry environment. The unit can also be wall mounted using the purpose designed wall mounting kit against a vertical wall capable of supporting the combined weight of the unit and mounting kit LA735. See INST39088 in-box wall mounting instructions for details.

> ⚠ WARNING!
> NOT TO BE USED IN FUME EXTRACTION ENCLOSURES.

## 2.6 Commissioning

PURELAB® Quest is supplied in a preset commissioning mode which must be completed before purified water can be dispensed, see quick start to complete this procedure.

## 2.7 Customer Support

If you need help with your product, please call your local ELGA Veolia® representative. For the address of the nearest ELGA Veolia® Sales and Service office visit our website.

www.elgalabwater.com or contact ELGA Veolia at: Email: techsupport@elgalabwater.com

# 3. GUIDE TO YOUR PURELAB QUEST


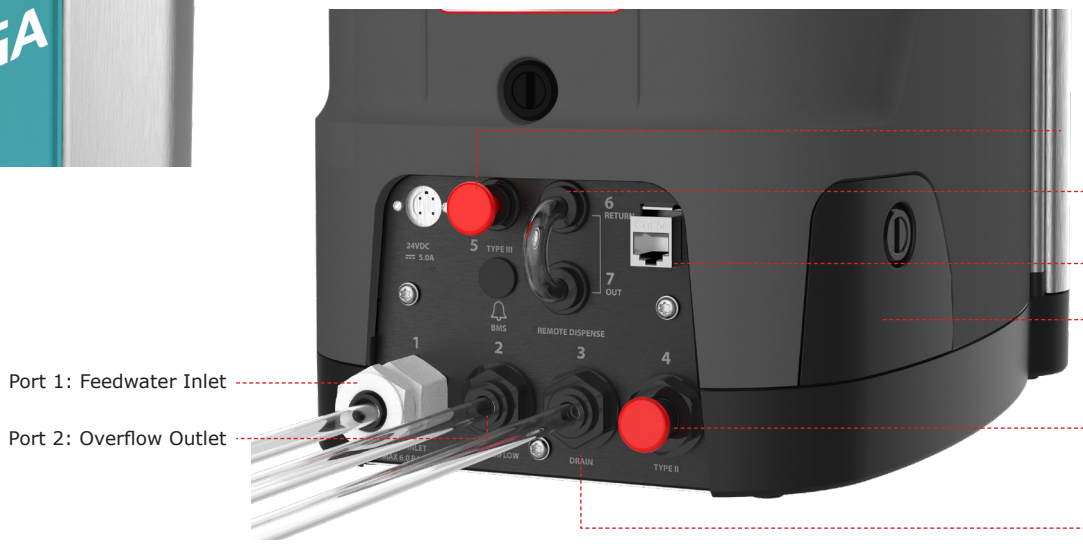

# 4. PRODUCT CONSUMABLES AND ACCESSORIES

| Consumables | | | |
|---|---|---|---|
| Part No. | Description | Typical Service Life* | Max. Shelf Life |
| LC292 | Purification Pack (DI) | 6 Months | 2 Years |
| LC209 | Sanitization Pack | 12 Months | 2 Years |
| LC209-M2 | Tablet Sanitization Pack | 12 Months | 2 Years |
| LA728 | Bypass Pack (Removed during commisioning) | N/A | N/A |
| LC210 | UltraViolet Lamp (UV) | 12 Months | 2 Years |
| LC291 | Vent Filter (VF) | 1 Year | 2 Years |
| LC217 | Reverse Osmosis Module (RO Service Module) | Typical Life 2 Years | 2 Years |
| LC134 | Point-Of-Use 0.2µm Mirco Filter (POU) | 3 Months | 2 Years |
| LC145 | Point-Of-Use 0.2µm Mirco Filter (POU) | 3 Months | 2 Years |
| LC197 | Point-Of-Use Bio Filter (POU) | 3 Months | 2 Years |
| SKU:40020 | Effersan® Sanitization Tablet | 1 every 6 months | 8 Months |
| Accessories | | | |
| LA821 | External Pre-treatment Filter Kit | 6 Months | 2 Years |
| LA735 | Wall Mounting Kit | N/A | N/A |
| LA512 | Feedwater Pressure Regulator | N/A | N/A |
| LA757 | External 15L Reservoir | N/A | N/A |
| LA758 | External 30L Reservoir | N/A | N/A |
| LA648 | External Boost Pump (Feedwater less than <2 Bar) | N/A | N/A |

* Consumable Life is an estimate only, and will depend on the application and feedwater quality.

Purification Pack
LC292

Tablet
Sanitization Pack
LC209-M2

Sanitization Pack
LC209

Bypass Pack
(Transit Pack)
LA728

UV Lamp
LC210

Vent Filter
LC291

RO Module
LC217
(Replaced by
a Service
Engineer only)

POU Filters
LC134
LC145

POU Filter
LC197

SKU40020:
EPA Approved
Sanitization
Tablets

(USA Only)

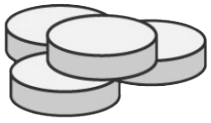

Pressure
Regulator LA512

## 5. Registering a Product

Taking the time now to register will mean that we can provide a better service to you in the future. We can contact you about product information and service updates.

Why Register your product?

- Validated your product warranty
- Proof of product registration
- Receive software and service updates

### How can I quickly register?

The model number and serial number can be found on the ratings plate, see below:

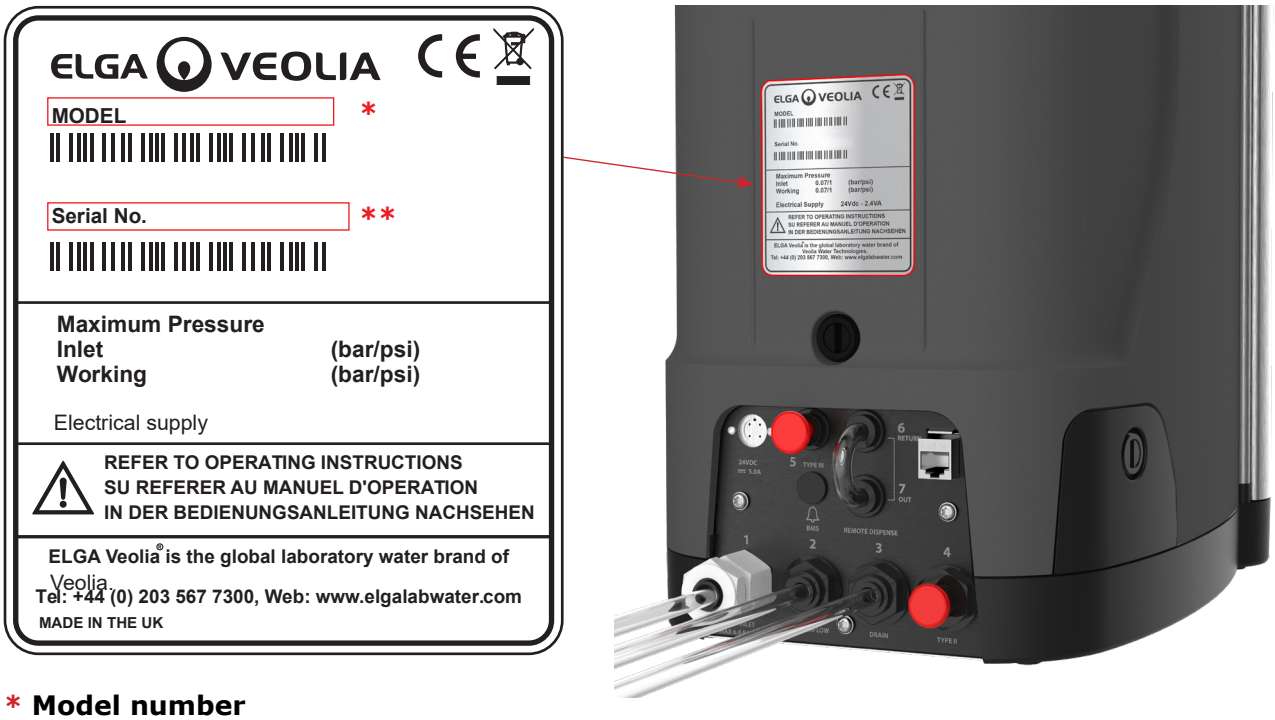


*** Model number**

**** Serial number**

Enter the model and serial number into the online form at:
https://www.elgalabwater.com/support/register-a-product

# 6. ADDITIONAL PURIFIED WATER OUTLET CONNECTIONS

The purified water outlet connections are located at the rear of PURELAB® QUEST, these are used for purified connections to other applications or products.

> ⚠ Caution!
> Port 4: Type 2 Outlet should not be connected to a pressurized application, this may cause back-flow into PURELAB® Quest.

## 6.1 PURELAB Quest Port 4: Type 2 - Water Outlet Connection for an application

### STEP 1 - Removing the transit plug and connecting the tube

1. Remove the transit plug from water outlet connection Port 4: Type 2 Outlet (Fig.1).
2. Insert an 8mm plastic tube into Port 4: Type 2 Outlet (Fig.2).

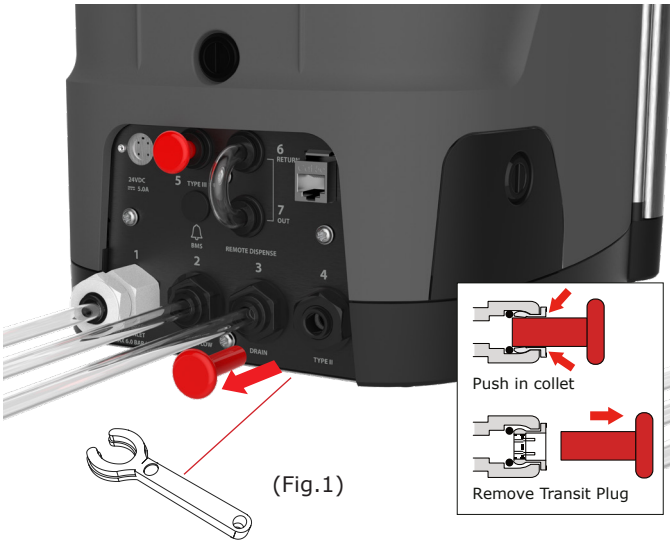


(Fig.1)

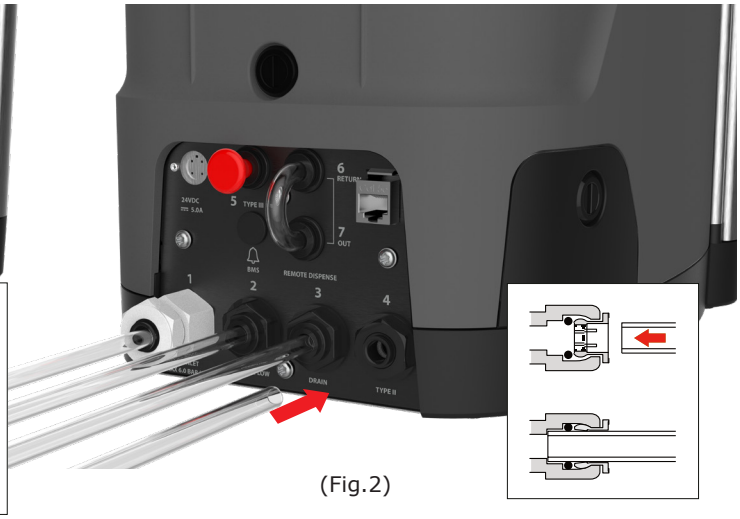

(Fig.2)

### STEP 2 - Opening the Purified Water Outlet Valve

1. Undo the quarter turn fastner to the access panel (Fig.3).
2. Connect the 8mm tube to an applicaton or product that requires purified water.
3. Open the manual isolation valve (Turn 90° Anti-clockwise) (Fig.4).

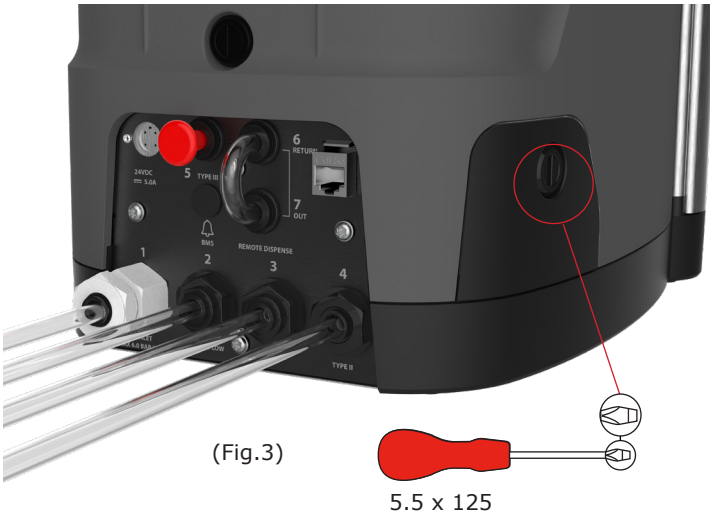


(Fig.3)

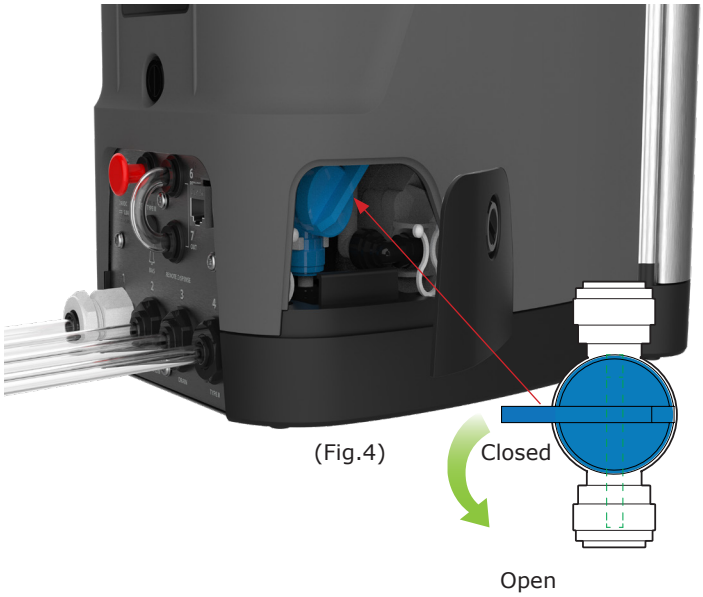


(Fig.4)

# 6. ADDITIONAL PURIFIED WATER OUTLET CONNECTIONS

## 6.2 PURELAB Quest Port 5: Type 3 - Water Outlet Connection for an external reservoir

### STEP 1 - Removing the transit plug and connecting the tube

1. Remove the transit plug from water outlet connection Port 5: Type 3 Outlet (Fig.1).
2. Insert an 8mm plastic tube into Port 5: Type 3 Outlet (Fig.2).

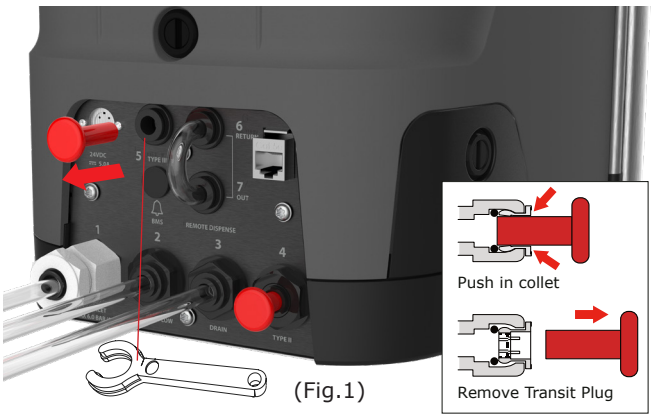


(Fig.1)

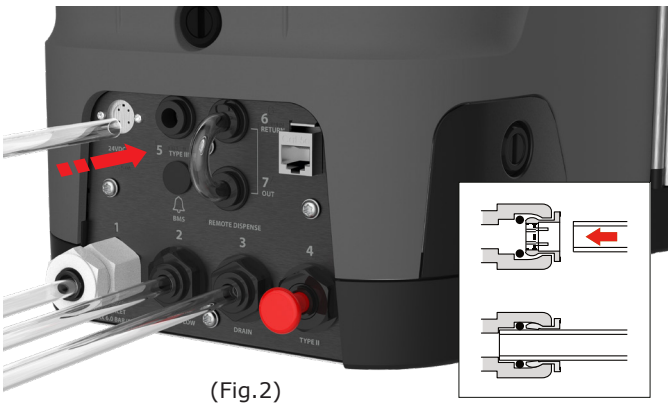

(Fig.2)

### STEP 2 - Connecting water and power to the reservoir

1. Remove the transit plug from reservoir Port 1: Inlet (Fig.3).
2. Insert the 8mm plastic tube from PURELAB Quest Port 5: Outlet into reservoir Port 1: Inlet (Fig.3).
3. Insert an 8mm plastic tube into the overflow and connect to drain (Fig.4).

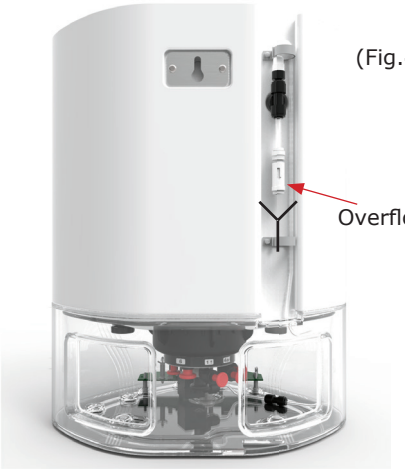


(Fig.4)

Reservoir Connections

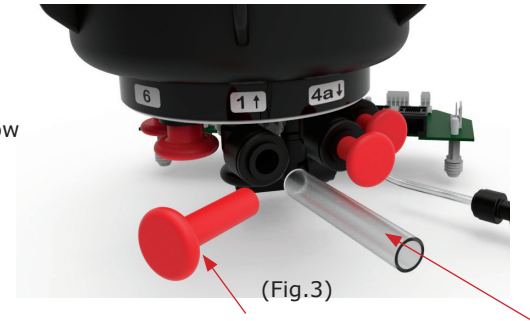


(Fig.3)

Transit Plug

8mm tube from PURELAB Quest Port 5: Type 3 Outlet

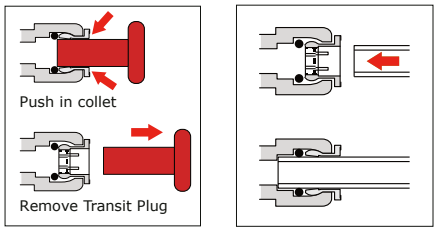


4. Connect the supplied comms lead from PURELAB Quest into J2 reservoir comms connection (Fig.5).

(Fig.5)

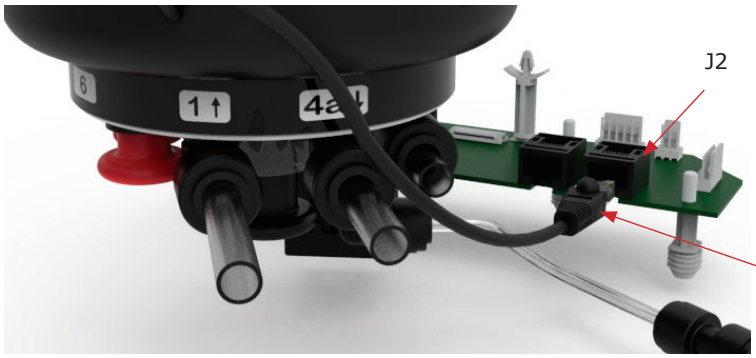


Comms lead from PURELAB Quest

# 6. ADDITIONAL PURIFIED WATER OUTLET CONNECTIONS

## 6.3 Port 6 and 7 - Water connections for Free-Standing Dispenser

### STEP 1 - Disconnect the power

1. Disconnect the power supply before removing the metal loop (Fig.1).

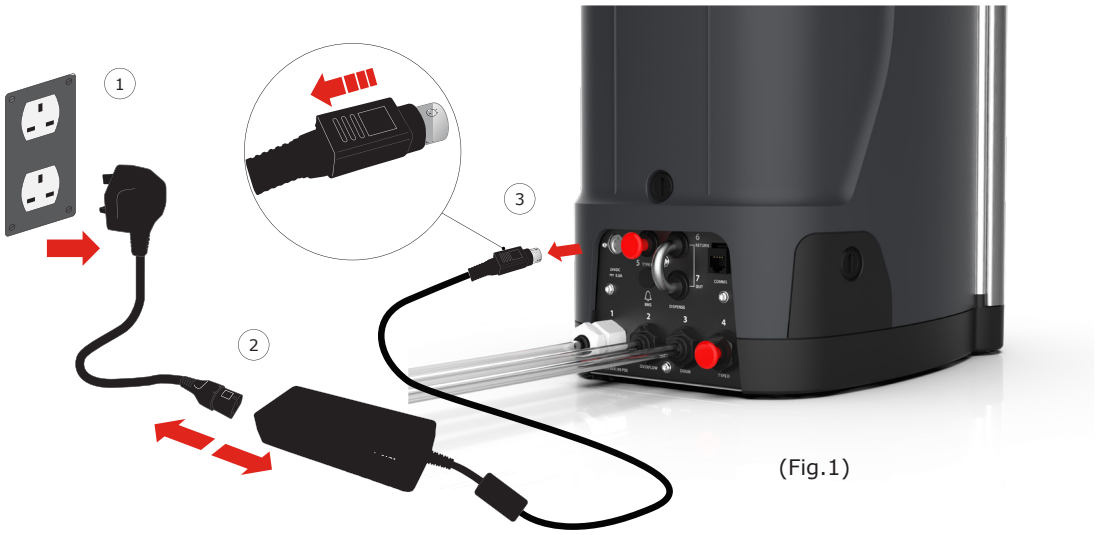


(Fig.1)

WARNING!
MAKE SURE THAT THE POWER SUPPLY CANNOT COME INTO CONTACT WITH WATER.

### STEP 2 - Removing the metal loop

1. Wait a couple of minutes before removing the metal loop.

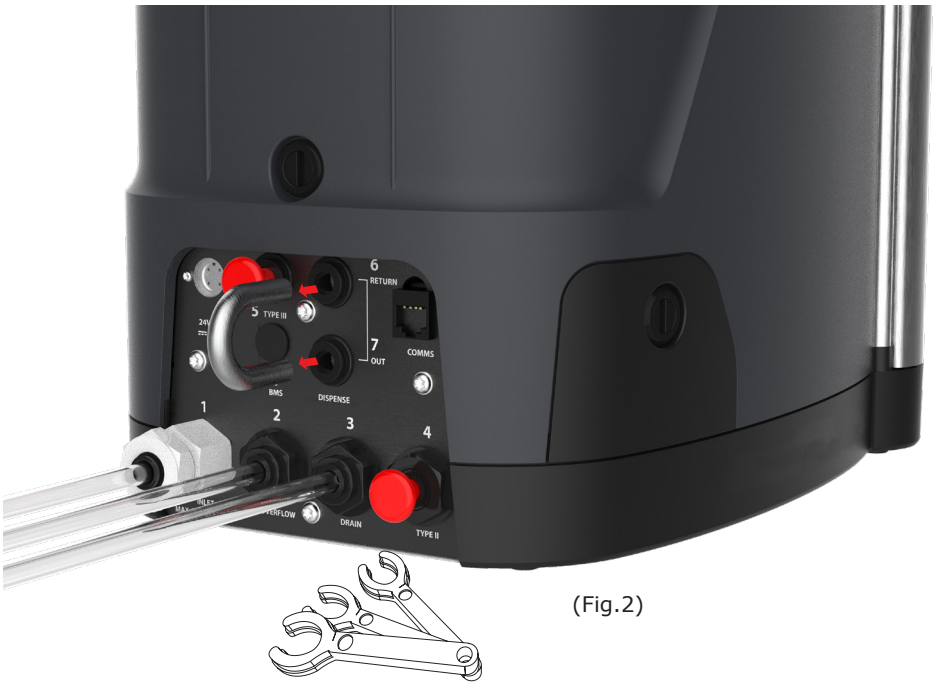


(Fig.2)

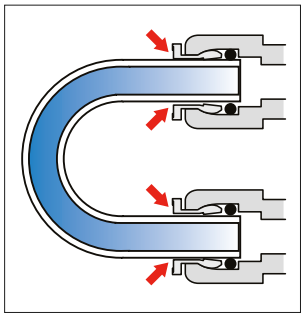

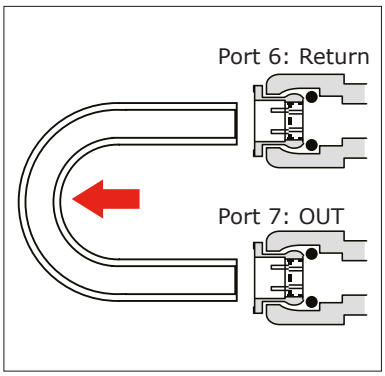


2. Remove the metal loop from Port: 6 and Port: 7 using an 8mm tubing key (Fig.2).

3. Follow the Free-standing Dispenser - Quick Start Guide to complete this installation.

# 7. QUICK REFERENCE GUIDE

## 7.1 Manual Dispense


Press dispense at anytime, release to stop.

## 7.2 Auto Volume Dispense


Press Auto-Volume at anytime.

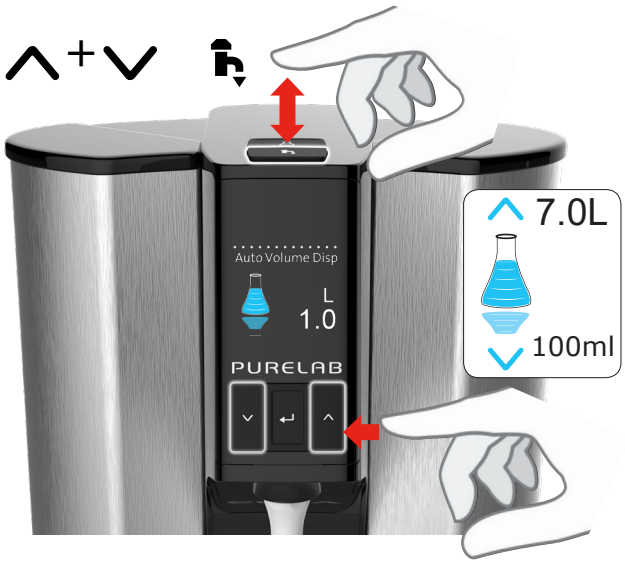


Press to scroll up and down, press dispense to confirm.

# 7. QUICK REFERENCE GUIDE

## 7.3 Deactivating - Auto Volume Dispense

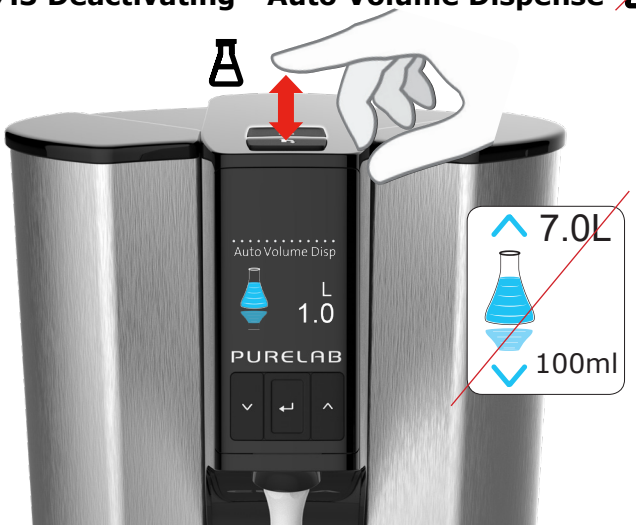


Press Auto-Volume dispense at anytime to exit.

## 7.4 ON - OFF, Menu and Accept

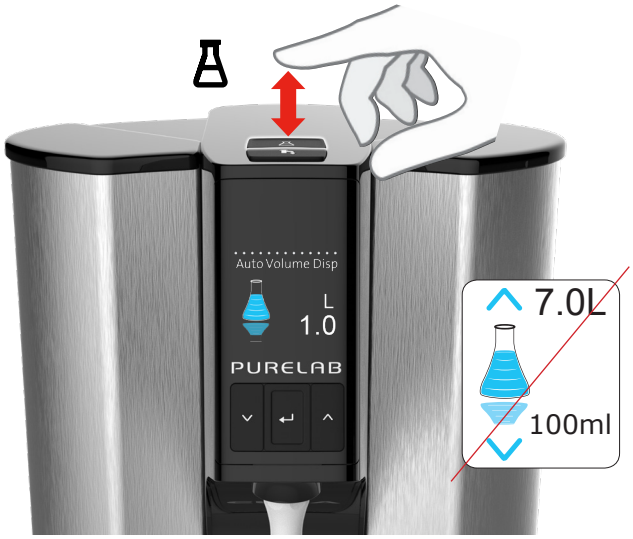


Deactivate Auto-Volume dispense, press once.


Press and Hold for 2 seconds to enter the Main Menu.
Scoll to select a feature in the Main Menu.

# 8. MAINTENANCE

## Maintenance

Any maintenance work not included in this operator manual should be carried out by an approved Service engineer or technician, please contact: https://www.elgalabwater.com/support/product-support

Note:
Disposing of used consumable items should be in accordance with local statutory regulations.

## 8.1 Replacing Ultraviolet Lamp LC210 - PQDIUVM1

The Ultraviolet (UV) Lamp should be replaced when;

- UV Lamp failure occurs.
- UV Lamp efficiency decreases affecting water quality.

If either situation occurs, a message will be displayed on screen asking you to replace the UV Lamp.

WARNING!
UV-C RADIATION IS HARMFUL TO EYES AND SKIN.
**LC210 UV LAMP SHOULD ONLY BE OPERATED INSIDE LC210 CHAMBER.**

IT'S STRONGLY RECOMMENDED THAT DURING THE HANDLING OF LC210 UV LAMP CUT-RESISTANT GLOVES SHOULD BE WORN FOR PROTECTION.

EN388 & EN374 Goggles

WARNING!
**LC210 UV LAMP CONTAINS MERCURY HAZARDOUS TO HEALTH, FRAGILE GLASS DO NOT BREAK**

IF BROKEN MAY CAUSE REDNESS OR IRRITATION AS A RESULT UPON CONTACT WITH SKIN OR EYES, PLEASE SEEK MEDICAL ATTENTION.

EN388 & EN374 Goggles

### STEP 1 - Switching OFF the power supply

1. ISOLATING the power supply, follow the instructions below (Fig.1).

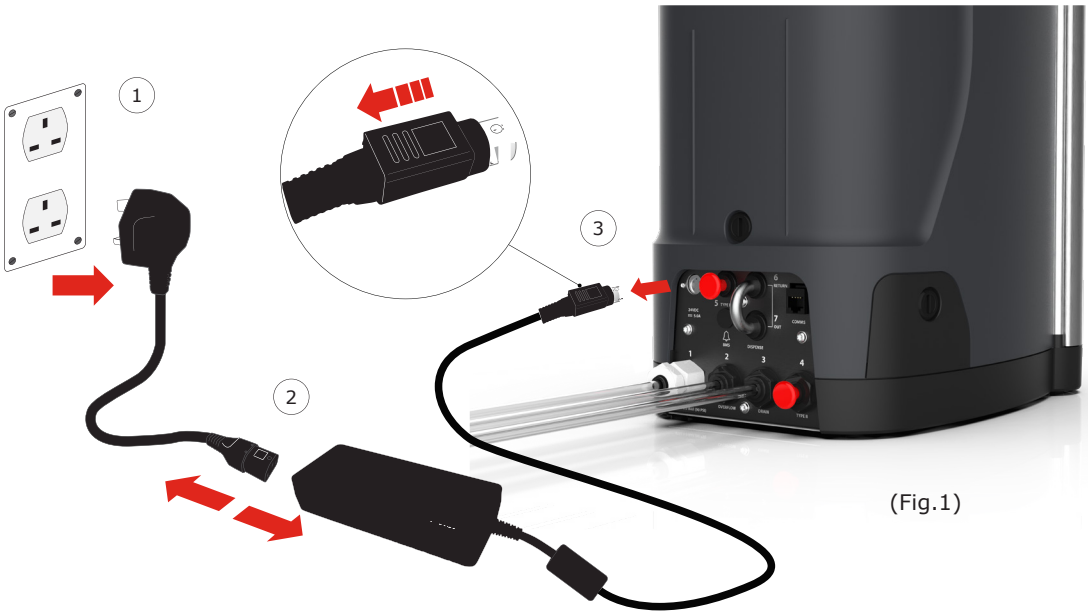


(Fig.1)

# 8. MAINTENANCE

## STEP 2 - Removing LC210 UV Lamp

1. Open the left side door (Fig.2).
2. Disconnect the UV lamp wiring connector (Fig.3).


(Fig.2)


(Fig.3)

## STEP 3 - Removing LC210 UV Lamp continued

Caution!
Use cut resistant gloves when handling the new UV Lamp LC210.

1. Carefully remove the UV lamp from it's chamber (Fig.4).
2. Discard used UV lamp in accordance with local regulations (Fig.5).


(Fig.4)


(Fig.5)

## STEP 4 - Replace LC210 UV Lamp

1. Unpack the new LC210 lamp from it's product packaging (Fig.6).


(Fig.6)

## 8. MAINTENANCE

2. Wipe the glass with the alcohol wipe
3. Slide the new LC210 UV lamp into the UV chamber (Fig.7).
4. Connect the UV lamp connector, making sure it is aligned correctly with the pins (Fig.8).
   (Use the black arrows as a guide)


(Fig.7)


(Fig.8)

### STEP 5 - Switching ON the Power Supply

1. Connect the power supply. (Fig.9).

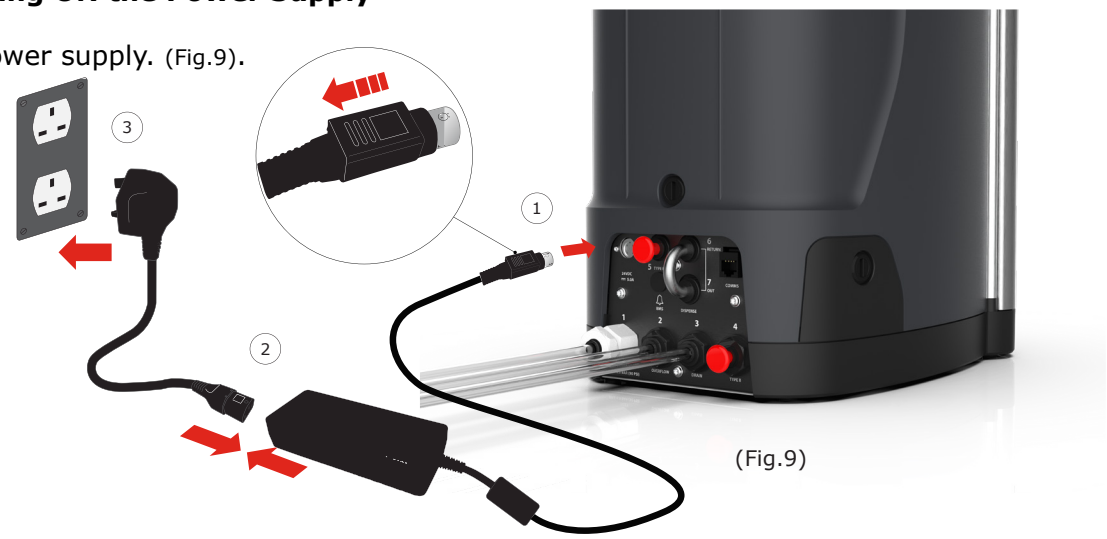


(Fig.9)

### STEP 6 - Resetting the LC210 UV Lamp reminder

1. Hold and press accept ↵ to enter the main menu. (Fig.10).
2. Scroll ∧ + ∨ and select 'Reset Reminders', press accept ↵ to confirm (Fig.11).
3. Scroll and select the UV filter, press accept ↵ to confirm (Fig.12).
4. The reset reminder is now set, normal operation will resume (Fig.13).


(Fig.10)


(Fig.11)

PQDIUVM1

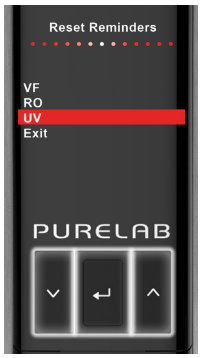


(Fig.12)


(Fig.13)

# 8. MAINTENANCE

## 8.2 Replacing LC292 DI Purification Pack

### Step 1 - Removing the used LC292 Purification Pack

1. Press and hold accept ↵ for 2 seconds to enter the Main Menu (Fig.1).
2. Scroll ∧+∨ and press accept ↵ 'Changing Purification Pack'
3. Open the right hand door (Fig.2).
4. When instructed release the LC292 Purification Pack by 'Pull back' and 'Push down' on the handle (Fig.3).
5. Dispose of in accordance with local regulations (Fig.4).


(Fig.1)

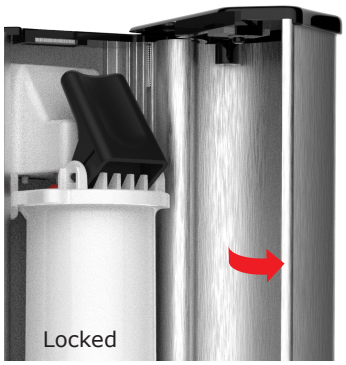


(Fig.2)

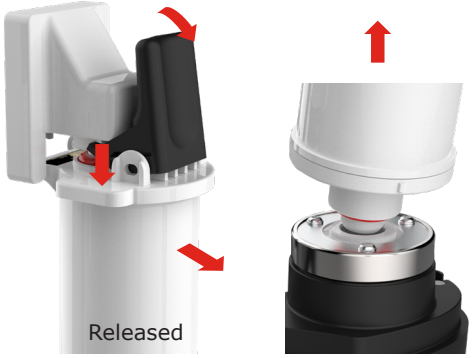


(Fig.3)


(Fig.4)

### Step 2 - Unpacking the New LC292 Purification Pack

1. Unpack the new Purification Pack and remove the transit plugs (Fig.5).


(Fig.5)


### Step 3 - Installing the New LC292 Purification Pack

1. When instructed, insert the base of the new Purification Pack first, then push down and inwards (Fig.6).
2. Follow the on screen instructions to complete the procedure.

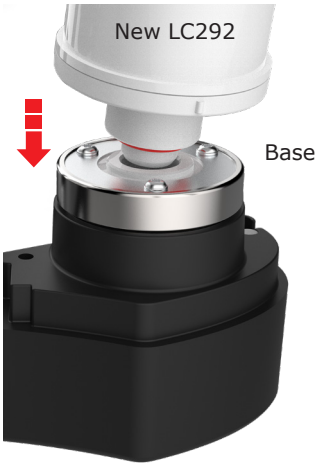


(Fig.6)


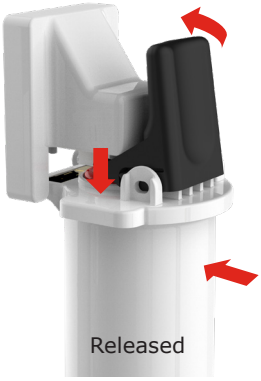


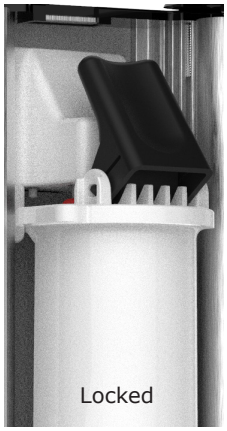

### 8.3 Cleaning the Inlet Feedwater Filter

PURELAB® QUEST is fitted with an inlet filter to protect it from water particles, which could affect the peformance of the product. It is recommended that the inlet filter assembly is periodically cleaned to remove any particles or debris that can cause a blockaged.

**STEP 1 - Isolate the power supply**

1. Isolate the power supply to the product (Fig.1).

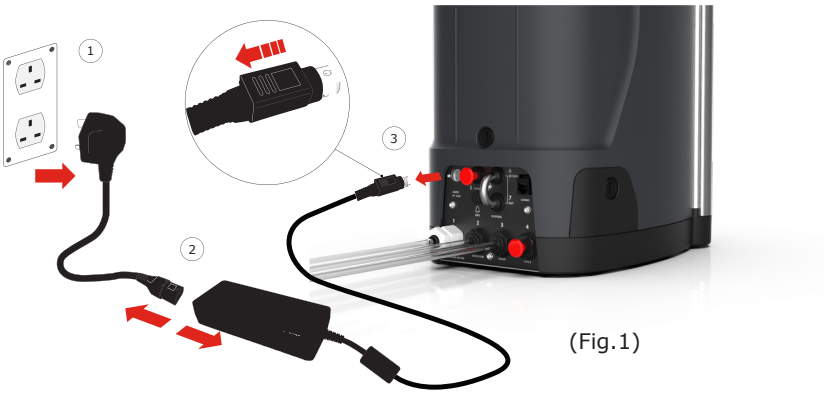


(Fig.1)

**STEP 2 - Turn OFF Feedwater Supply**

**STEP 3 - Dismantle the Inlet Filter Assembly**

1. Remove the feedwater plastic tube, using an 8mm tubing key (Fig.2).
2. Unscrew the inlet filter nut with an adjustable spanner (Fig.3).

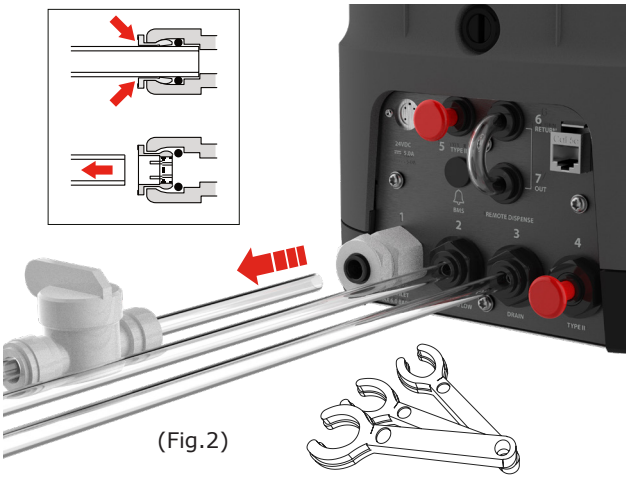

(Fig.2)

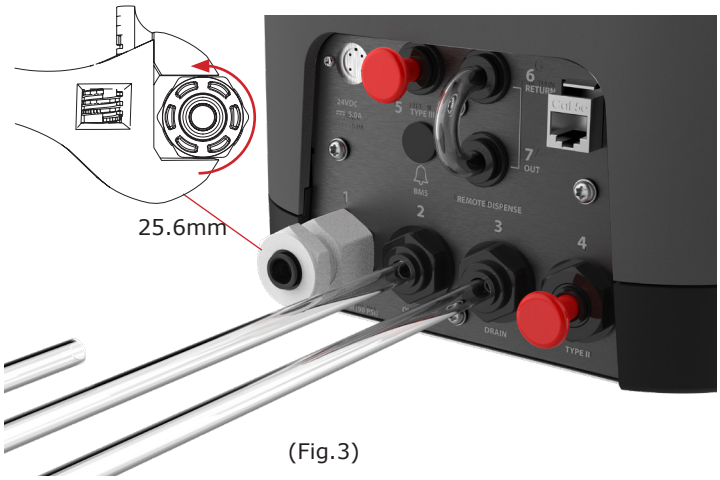


(Fig.3)

# 8. MAINTENANCE

## STEP 4 - Cleaning the Inlet Feedwater Filter

1. Check the mesh filter for damage and clean with purfied water (Fig.4).
2. Insert the black rubber washer and mesh filter into its original position (Ensure that the mesh filter dome is facing outwards)
3. Re-Assemble the inlet feedwater filter assembly (Fig.5).

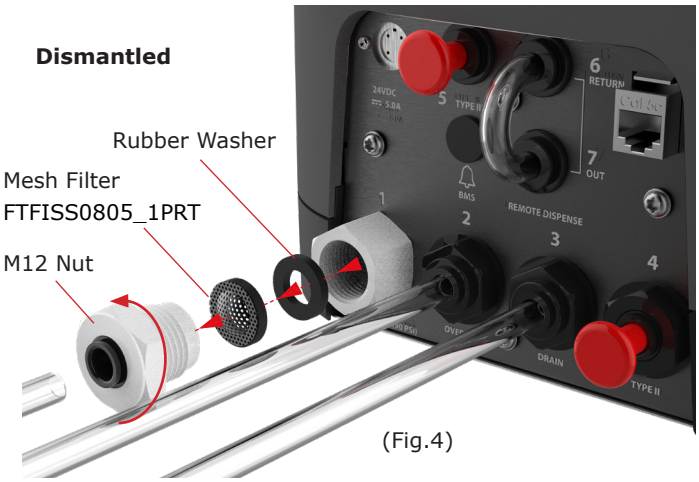


(Fig.4)

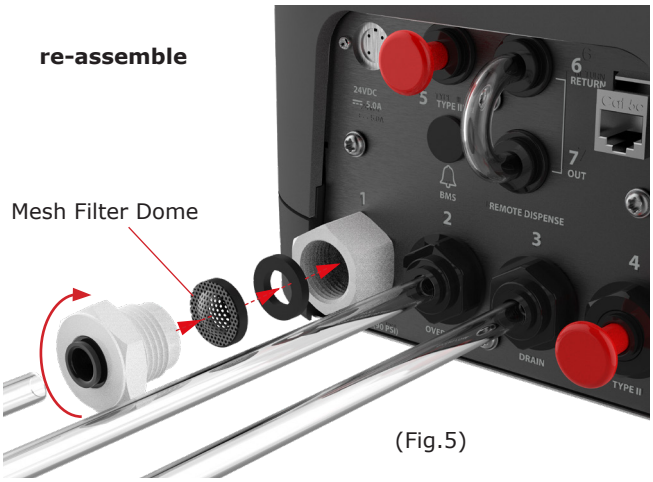


(Fig.5)

## STEP 5 - Reconnecting the Feedwater Supply and Power Supply

1. Reconnect the tube and open the valve, restoring the water connection.
2. Reconnect the power supply to the product (Fig.6).
3. Switch ON to resume normal operation.

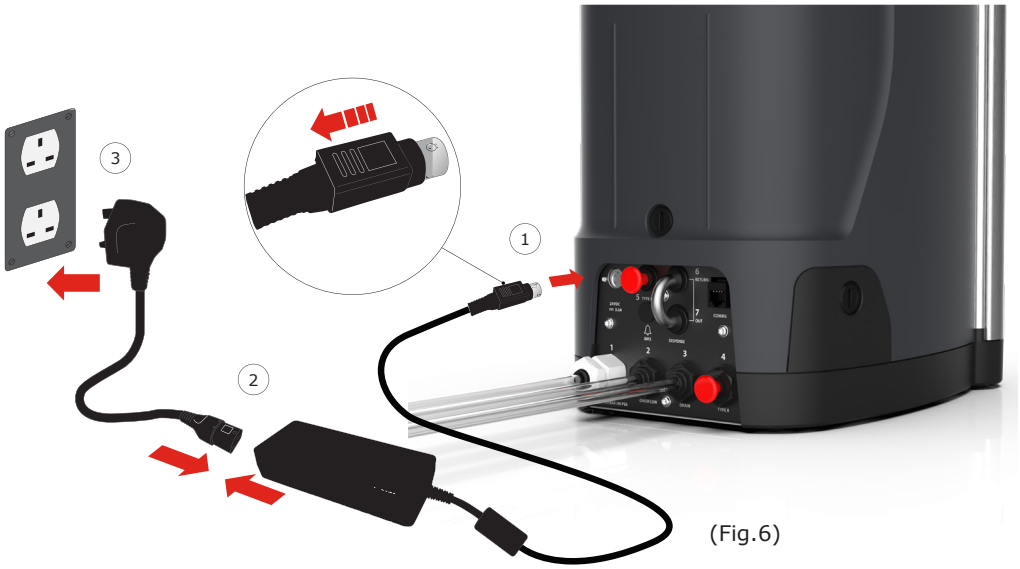


(Fig.6)

### 8.4 Replacing LC217 Reverse Osmosis Module

PURELAB® QUEST is fitted with a Reverse Osmosis (RO) module which is replaced during a product service or if permeate water purity or flow rate is not adequate and does not meet predicted performance levels. Please contact product support for more information: https://www.elgalabwater.com/support/product-support

### 8.5 Replacing Vent Filter LC291 and Point-of-Use Filter LC134 / LC145 / LC197

#### Step 1 - Removing the used LC291 Vent Filter

1. Unscrew the used LC291 vent filter from the reservoir (Fig.1).
2. Dispose of the used LC291 vent filter in accordance with local regulations (Fig.2).

(Fig.1) (Fig.2)

#### Step 2 - Unpacking the Vent Filter and Install

1. Unpack the new LC291 Vent filter from its outer packaging, write the installation date (Fig.3).
2. Screw the new LC291 Vent filter into the reservoir (Fig.4).

(Fig.3) (Fig.4)

#### Step 3 - Reset the Vent Filter Reminder

1. Hold and press accept ↵ to enter the main menu. (Fig.5).
2. Scroll ∧ +∨ and select 'Reset Reminders', press accept ↵ to confirm (Fig.6).
3. Scroll and select the VF, press accept ↵ to confirm (Fig.7).
4. The reset reminder is now complete, normal operation will resume (Fig.8).


(Fig.5)


(Fig.6)

PQDIUVM1

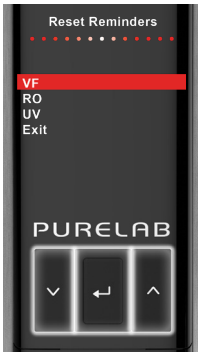


(Fig.7)


(Fig.8)

# 8. MAINTENANCE

## Replacing the Point-Of-Use Filter LC134 / LC145 / LC197

### Step 1 - Removing the Dispense Tip

1. Unscrew the dispense tip from underneath the display (Fig.1).
2. Do not dispose of the dispense tip, this part is required for the sanitization procedure (Fig.2).


(Fig.1)


(Fig.2)

### Step 2 - Unpacking the LC134 / LC145 / LC197 Point-Of-Use Filter and Installing

1. Unpack the new POU filter from it's outer and inner packaging, remove the cap (Fig.3).
2. Coupler is not required for PURELAB® QUEST, screw in the Point-of-Use filter (Fig.4).

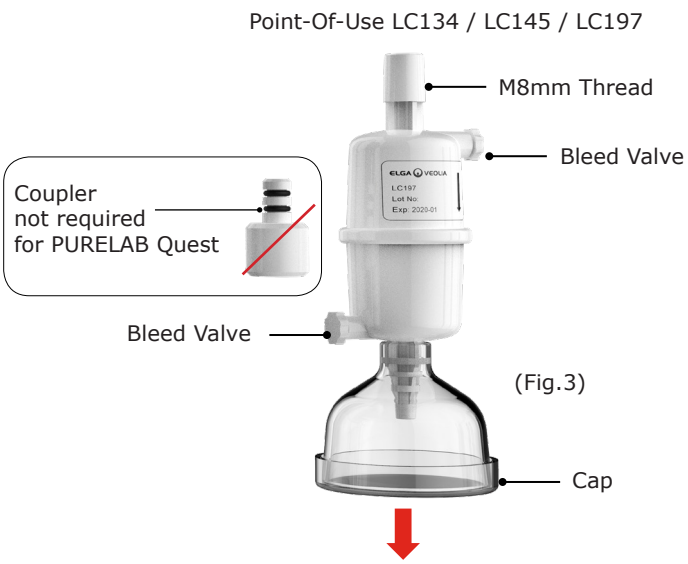


(Fig.3)

(Fig.4)

3. Slightly open both bleed valves, before dispensing any water to release any trapped air (Fig.5).
4. Press the dispense button, drawing water through and close both bleed valves (Fig.6).
5. Installation is completed, normal operation can resume.

(Fig.5)

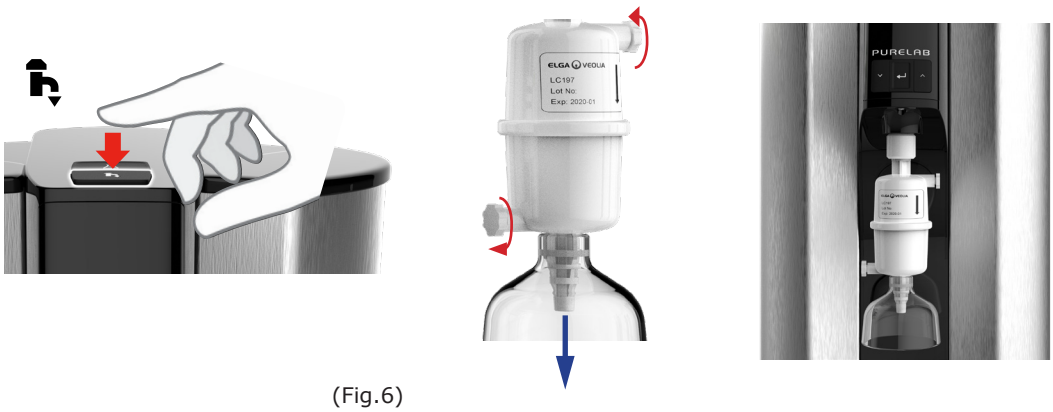


(Fig.6)

# 8. MAINTENANCE

The unit is sanitized to maintain or recover microbiological purity of the product water, sanitization is recommended every 12 months.

- It should be carried out if the product has been switched OFF for a prolonged period.
- If the unit has been operated under adverse conditions such as in high temperatures.
- If the bacteria counts are outside the recommend levels - See section 11 Technical Specifications.

WARNING!
IT'S STRONGLY RECOMMENDED THAT DURING THE SANITIZATION PROCEDURE PPE IS WORN. ALWAYS FOLLOW RECOMMENDATIONS FOUND IN THE MANUFACTURES MATERIAL SAFETY DATA SHEET AND ANY APPLICABLE OSHA STANDARDS FOR CHEMICAL HANDLING.


EN388 & EN374


Goggles

WARNING!
BEFORE STARTING THIS PROCEDURE LABEL PURELAB® QUEST WITH THE ATTACHED WARNING SIGN.

## 8.6 Sanitization Procedure - LC209 Sanitization Pack

### Step 1 - Unpacking the LC209 Sanitization Pack

1. Remove the Sanitization Pack LC209 from the outer packaging.
2. Remove the tranisit plugs from either end of the pack and dispose (Fig.1).

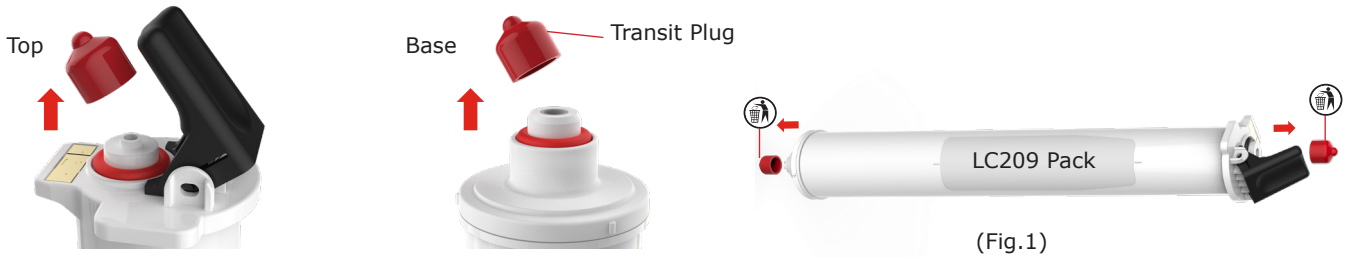

(Fig.1)

### Step 2 - Remove the used Purification Pack LC292 and Install the LC209 Pack

1. Press and hold accept ↵ for 2 seconds to enter the Main Menu (Fig.2).
2. Scroll ∧+∨ and select 'Sanitization' ↵ in the Main Menu (Fig.2).
3. Open the right hand door to the Purification Pack housing (Fig.3).
4. Release the pack 'Pull back' and 'Push down' on the handle (Fig.4).
5. Dispose of the used Purification Pack in accordance with local regulations (Fig.5).

(Fig.2)

(Fig.3)

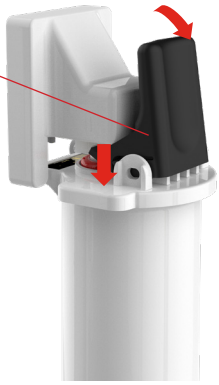
(Fig.4)

(Fig.5)

### Step 3 - Installing LC209 Sanitization Pack

1. Insert the base of the Sanitization Pack LC209 first, then clip into position (Fig.6).
2. Follow the on screen instructions to complete this procedure.


(Fig.6)

### 8.7 Sanitization Procedure - LC209-M2 Sanitization Pack (USA ONLY)

### Step 1 - Unpacking the LC209-M2 Sanitization Pack

1. Remove the Sanitization Pack LC209-M2 from the outer packaging.
2. Remove the tranisit plugs from either end of the pack and dispose (Fig.1).


(Fig.1)

### Step 2 - Removing the base from LC209-M2

1. Unscrew the pack base, using the red molded hand tool (Fig.2).

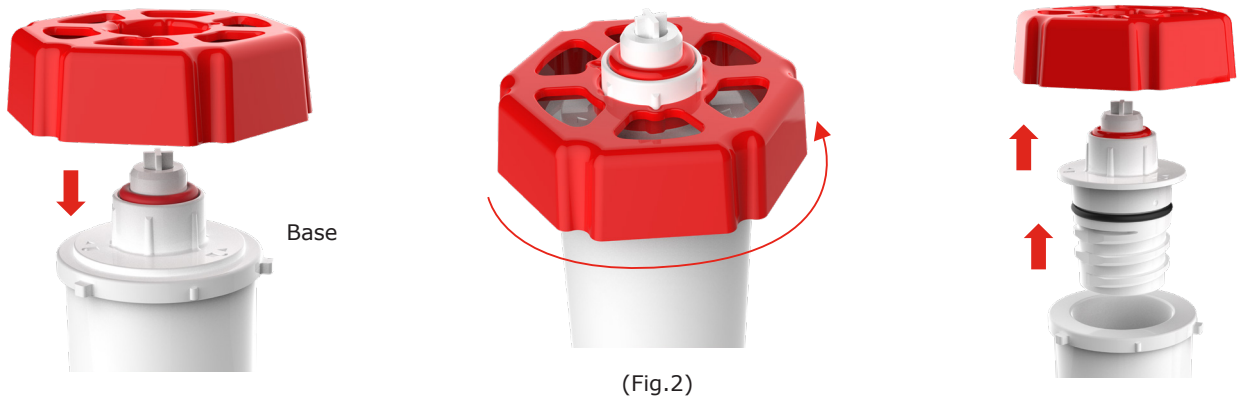


(Fig.2)

## 8. MAINTENANCE

### Step 3 - Insert a Sanitization Tablet into LC209-M2

1. Insert 1 X Effersan Sanitization tablet into the chamber (Fig.3).
2. Re-assemble the LC209-M2 pack (Fig.4).
3. Hand tighten using the provided moulded tool (Fig.5).
4. Ensure there are no gaps in the pack base (Fig.6).

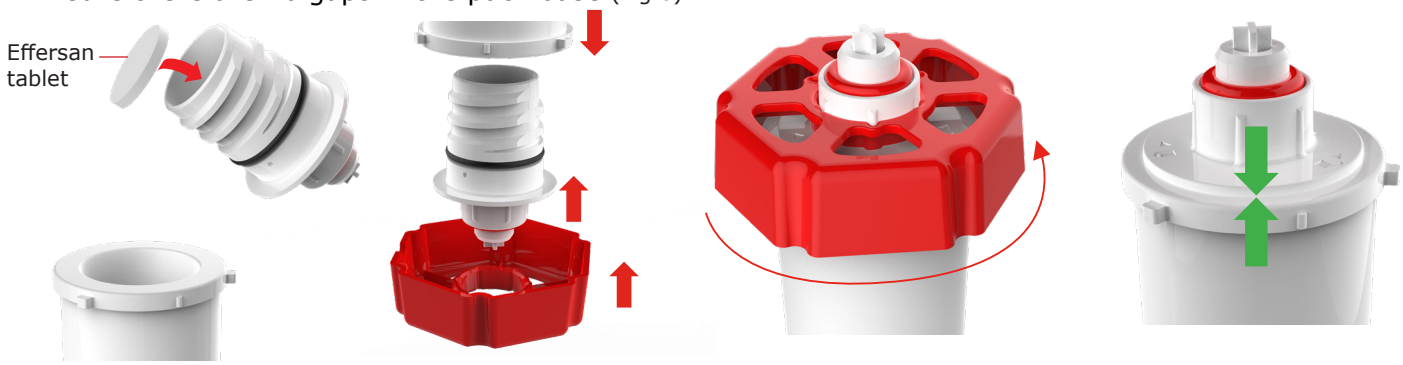


(Fig.3) (Fig.4) (Fig.5) (Fig.6)

### Step 4 - Remove the used Purification Pack LC292 and Install the LC209-M2 Pack

1. Press and hold accept ↵ for 2 seconds to enter the Main Menu (Fig.7).
2. Scroll ∧+∨ and select 'Sanitization' ↵ in the Main Menu (Fig.7).
3. Open the right hand door to the Purification Pack housing (Fig.8).
4. Release the pack 'Pull back' and 'Push down' on the handle (Fig.9).
5. Dispose of the used Purification Pack in accordance with local regulations (Fig.10).


(Fig.7) (Fig.8) (Fig.9) (Fig.10)

### Step 5 - Installing LC209-M2 Sanitization Pack

1. Insert the base of the Sanitization Pack LC209-M2 first, then clip into position (Fig.11).
2. Follow the on screen instructions to complete this procedure.


(Fig.11)

# 9. TROUBLESHOOTING

This section covers some of the issues that could occur with your PURELAB® QUEST, and provides the troubleshooting steps to help you resolve the problem.

For product support, please contact: https://www.elgalabwater.com/support/product-support

WARNING!
ALWAYS ENSURE THAT THE POWER SUPPLY IS ISOLATED, DURING ANY MAINTENANCE WORK.

| Issues | Action |
|---|---|
| **Blank Display Screen** | 1. Press any button to wake from sleep mode.<br>or<br>2. Check the power supply is connected to the product, ensuring that all connections are securly fitted. (Turn the power OFF/ON)<br>or<br>3. Check the plug socket fuse, replace if nessary. |
| **Unable to Enter the Features in the Main Menu** | 1. Check the product is turned ON.<br>or<br>2. Make sure Auto-Volume is disabled.<br>(See section 7.3 - Quick Reference Guide |
| **Message Displayed - Purification Pack Change Reminder** | 1. Replace the Purification Pack.<br>(See section 8.2 Replacing Purification Pack LC292) |
| **Incorrect Volume of Water** | 1. Select Auto-Volume Calibration in the main menu. |
| **Purification Pack Life** | 1. Do not exceed 10L of dispened water a day.<br>* Available Volume of Type 1 and 2 water, combined; Increased use will reduce purification pack life.<br>or<br>2. Test the feedwater supply, using a water testing kit.<br>Contact product support for advice:<br>https://www.elgalabwater.com/support/product-support<br>(See section 11 Technical Specifications - Feedwater - Conductivity)<br>or<br>If permeate water purity or flow rate is not adequate and does not meet predicted performance levels. Please contact product support for more information:<br>https://www.elgalabwater.com/support/product-support |

# 9. TROUBLESHOOTING

| Issues | Action |
|---|---|
| **Message Displayed - Sanitization Reminder** | 1. Complete a Sanitization Procedure.<br>(See section 8.6 / 8.7 Sanitization Procedures) |
| **Message Displayed - UV Lamp Change Reminder** | 1. Complete a UV Lamp change.<br>(See section 8.1 Replacing Ultraviolet Lamp)<br>2. Reset UV Lamp reminder.<br>(See section 8.1 Replacing Ultraviolet Lamp) |
| **Message Displayed - High Temperature Water Alarm** | 1. Adjust the alarm points settings via Main Menu.<br>or<br>2. Check the feedwater temperature.<br>3. Press the Dispense button to draw some water through the system, swith OFF and restart. |
| **Reduced Dispensing Flow Rate** | 1. Check the mesh feedwater inlet filter for blockages.<br>(See section 8.3 Cleaning the Inlet Filter)<br>or<br>2. Replace the Point-Of-Use Filter.<br>(See section 8.5 Replacing the Vent Filter LC291 and Point-Of-Use Filter LC134 - LC145 - LC197)<br>or<br>3. Check the feedwater valves are fully opened.<br>(See section 8.3 Cleaning the Inlet Filter) |
| **Message Displayed - Dispense Water Purity Alarm** | 1. Check the alarm points settings via Main Menu.<br>(See section 10.1 Set Alarm Points)<br>or<br>2. Replace the Purification Pack LC292 and wait for the cycle to complete.<br>(See section 8.2 Replacing the Purification Pack LC292)<br>or<br>3. Replace the Ultraviolet Lamp LC210.<br>(See section 8.1 Ultraviolet Lamp LC210)<br><br>(Water Purity Alarm is active during commissioning, see quick start) |

# 10. CUSTOMIZE OPERATION

## 10.1 Set Alarm Points

1. Hold and press accept ↵ to enter the main menu (Fig.1).
2. Scroll ∧+∨ and select Set Alarm Points, press accept ↵ to confirm (Fig.2).
3. Scroll ∧+∨ and select a feature, press accept ↵ to confirm (Fig.3).
4. Adjust the valve by scrolling ∧+∨, press accept ↵ to save (Fig.4).
5. Normal operation will now resume. (Fig.5).

(Fig.1)

(Fig.2)

(Fig.3)

(Fig.4)

(Fig.5)

## 10.2 Advanced Data Logging

1. Insert a USB stick into the USB port (Fig.1).
2. Scroll ∧+∨ and select 'Start Data Logging', press accept ↵ to confirm (Fig.2).
3. Scroll ∧+∨ and select an interval data recording time, press accept ↵ to confirm (Fig.3).
4. To finish recording press the down ∨ and remove the USB. (Fig.4).
5. Downloaded Data files can be viewed on your PC or Mac.

(Fig.1)

(Fig.2)

(Fig.3)

(Fig.4)


## 10.3 Software Update

1. Download the latest software file onto a blank USB at: www.elgalabwater.com/customize
2. Scroll ∧+∨ and select 'Software Update', press accept ↵ to confirm (Fig.2).
3. Progress will be displayed on screen (Fig.3).
4. Once completed PURELAB QUEST will power OFF, hold and press ↵ accept to power ON (Fig.4).
5. Software update is now complete, normal operation will resume (Fig.5).

(Fig.1)

(Fig.2)

(Fig.3)

(Fig.4)

Software Version
(Fig.5)

# II. TECHINICAL SPECIFICATIONS

| Techinical Specifications | | |
|---|---|---|
| **Feedwater Specifications** | | |
| Model | PURELAB® QUEST RO/DI/UV - PQDIUVM1 | PURELAB® QUEST RO/DI - PQDIXXM1 |
| Water Source | (Potable Water Source) | (Potable Water Source) |
| Conductivity | <2000µS/cm<br>(high conductivity feedwaters may lower purification pack life and raise Type 3 water conductivity) | <2000µS/cm<br>(high conductivity feedwaters may lower purification pack life and raise Type 3 water conductivity) |
| Hardness | <350 ppm as $CaCO_3$ | <350 ppm as $CaCO_3$ |
| Free Chlorine | <0.05 ppm $Cl_2$ | <0.05 ppm $Cl_2$ |
| Chloramine | <0.02 ppm $Cl_2$ | <0.02 ppm $Cl_2$ |
| Total Chlorine | <0.05 ppm $Cl_2$ | <0.05 ppm $Cl_2$ |
| Silica | <30 ppm $SiO_2$ | <30 ppm $SiO_2$ |
| Carbon Dioxide ($CO_2$) | <30 ppm (recommended <20 ppm) | <30 ppm (recommended <20 ppm) |
| Fouling Index | <10 | <10 |
| Iron / Manganese | <0.5 ppm Fe/Mn | <0.5 ppm Fe/Mn |
| TOC (Total Organic Carbon) | Recommended <2 ppm | Recommended <2 ppm |
| **Environment** | | |
| Temperature | 4 - 40 °C (recommended 10 - 25 °C) | 4 - 40 °C (recommended 10 - 25 °C) |
| Humidity | Non-condensating. Humidity Max 80% | Non-condensating. Humidity Max 80% |
| Surroundings | Clean laboratory environment | Clean laboratory environment |
| **Feedwater Pressure and Flow Rates** | | |
| Feedwater Flowrate | Up to 75 L/hr | Up to 75 L/hr |
| Mains Drain Requirements | >90 L/hr | >90 L/hr |
| Minimum Inlet Pressure | 2 bar (30 psi) | 2 bar (30 psi) |
| Maximum Inlet Pressure | 6 bar (30 psi) | 6 bar (30 psi) |
| Optimum Inlet Pressure | Regulate to 4 bar (LA512) | Regulate to 4 bar (LA512) |
| **Pipe Connections** | | |
| Inlet | 8mm (5/16) OD Tube | 8mm (5/16) OD Tube |
| Outlet | 8mm (5/16) OD Tube | 8mm (5/16) OD Tube |
| Drain | 8mm (5/16) OD Tube | 8mm (5/16) OD Tube |
| Reservoir Outlets | 8mm (5/16) OD Tube | 8mm (5/16) OD Tube |
| Reservoir Overflow | 8mm (5/16) OD Tube | 8mm (5/16) OD Tube |

# II. TECHINICAL SPECIFICATIONS

| Techinical Specifications | | |
|---|---|---|
| **Dimensions and Weights** | PURELAB® QUEST RO/DI/UV - PQDIUVM1 | PURELAB® QUEST RO/DI - PQDIXXM1 |
| | 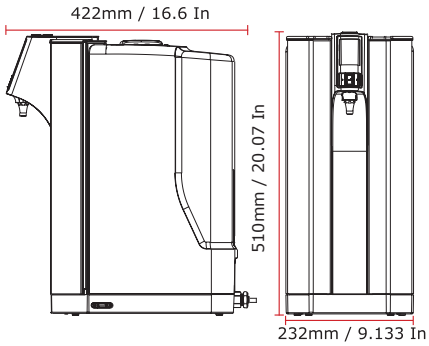 | 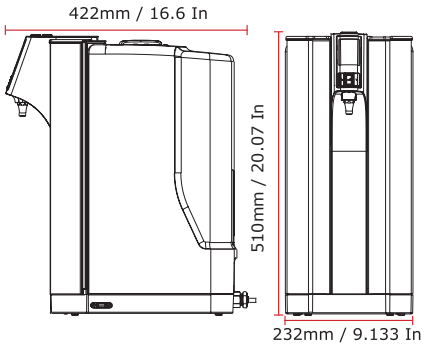 |
| Dispatch Weight | 19.6KG | 18.5KG |
| Operational Weight | 23KG | 21.4KG |
| Installation | Worktop or Wall Mounting | Worktop or Wall Mounting |
| **Electrical Requirements** | | |
| Mains Input | 100-240 VAC, 50-60 Hz | 100-240 VAC, 50-60 Hz |
| Power Required (Excluding Pump and UV) | 24 V DC | 24 V DC |
| Power Consumption | 120 VA | 120 VA |
| Noise Output | dBA - < 40 | dBA - < 40 |
| **Type 1 (Dispenser Tip)** | | |
| Resistivity | 18.2MΩ.cm@25°C | 18.2MΩ.cm@25°C |
| Dispenser flow-rate | up to 1.2l/min | up to 1.2l/min |
| Available Volume* | Up to 10l/day | Up to 10l/day |
| TOC | <5ppb | <30ppb |
| Bacteria (LC134 / LC145 / LC197 POU filter Fitted) | <0.1cfu/ml | <0.1cfu/ml |
| Endotoxin (LC197 POU filter fitted) | <0.001Eu/ml | <0.001Eu/ml |
| RNases | <1pg/ml | N/A |
| DNases | <5pg/ml | N/A |
| pH | Effectively Neutral | Effectively Neutral |
| Particulates (LC134 / LC145 / LC197 fitted) | 0.2µm filtration | 0.2µm filtration |
| **Type 2 Water Outlet (Port: 4)** | | |
| Resistivity | >1.0MΩ.cm@25°C | >1.0MΩ.cm@25°C |
| TOC (ppbC) | <50ppb | <50ppb |
| Bacterial TVC | <100 (cfu/ml) | <100 (cfu/ml) |
| Available Volume* | Up to 10L/day | Up to 10L/day |
| **Type 3 Water Outlet (Port: 5)** | | |
| Conductivity (µS/cm)** | <20 (µS/cm) | <20 (µS/cm) |
| TOC** | <200ppb | <200ppb |
| Bacterial TVC** | <1000 (cfu/ml) | <1000 (cfu/ml) |
| Ionic rejection*** | >96% | >96% |
| Particulates and Bacteria rejection | >99% | >99% |
| Organic rejection (MW>200 Da) | >99% | >99% |
| Product flow*** | 10l/hr | 10l/hr |
| Available Volume | Up to 30l/day | Up to 30l/day |

* Available Volume of Type 1 and 2 water, combined; Increased use will reduce purification pack life.

**Subject to suitable feed-water purity (see ionic rejection) and system maintenance.

***With feed water pressure at >4bar and temperature at 15°C

# 12. WARRANTY / CONDITIONS OF SALE

ELGA Veolia® is a trading name of VWS (UK) Ltd.

General Limited Warranty

VWS (UK) Ltd. warrants the products manufactured by it against defects in materials and workmanship when used in accordance with applicable instructions for a period of one year from the date of shipment for the products. VWS (UK) Ltd. MAKES NO OTHER WARRANTY, EXPRESSED OR IMPLIED. THERE IS NO WARRANTY OF MERCHANTABILITY OR FITNESS FOR A PARTICULAR PURPOSE.

The warranty provided herein and the data, specifications and descriptions of the VWS (UK) Ltd. products appearing in VWS (UK) Ltd. published catalogues and product literature may not be altered except by express written agreement signed by an officer of VWS (UK) Ltd. Representations, oral or written, which are inconsistent with this warranty or such publications are not authorized and, if given, should not be relied upon.

In the event of a breach of the foregoing warranty, VWS (UK) Ltd. sole obligation shall be to repair or replace, at its option, any product or part thereof that proves to be defective in materials or workmanship within the warranty period, provided the customer notifies VWS (UK) Ltd. promptly of any such defect. The exclusive remedy provided herein shall not be deemed to have failed of its essential purpose so long as VWS (UK) Ltd. is willing and able to repair or replace any nonconforming VWS (UK) Ltd. product or part. VWS (UK) shall not be liable for consequential, incidental, special or any other indirect damages resulting from economic loss or property damage sustained by any customer from the use of its products.

Water System Limited Warranty

VWS (UK) Ltd. warrants the water systems manufactured by it, BUT EXCLUDING MEMBRANES AND PURIFICATION PACKS, against defects in materials and workmanship when used in accordance with the applicable instructions and within the operating conditions specified for the systems for a period of one year from the earlier of:

the date of installation, or the 120th day following the date of shipment.

VWS (UK) LTD. MAKES NO OTHER WARRANTY, EXPRESSED OR IMPLIED. THERE IS NO WARRANTY OF MERCHANTABILITY OR FITNESS FOR A PARTICULAR PURPOSE. The warranty provided herein and the data, specifications and descriptions of the VWS (UK) Ltd. systems appearing in VWS (UK) Ltd. published catalogues and product literature may not be altered except by express written agreement signed by an officer VWS (UK) Ltd. Representations, oral or written, which are inconsistent with this warranty or such publications are not authorised and, if given, should not be relied upon.

In the event of a breach of the foregoing warranty, VWS (UK) Ltd. sole obligation shall be to repair or replace, at its option, any product or part thereof that proves to be defective in materials or workmanship within the warranty period, provided the customer notifies VWS (UK) Ltd. promptly of any such defect. The cost of labour for the first ninety (90) days of the above warranty period is included in the warranty; thereafter, labour cost shall be at the customer's expense. The exclusive remedy provided herein shall not be deemed to have failed of its essential purpose so long as VWS (UK) Ltd. is willing and able to repair or replace any nonconforming VWS (UK) Ltd. system or component part. VWS (UK) Ltd. Ltd. shall not be liable for consequential, incidental, special or any other indirect damages resulting from economic loss or property damage sustained by any customer from the use of its process systems.

Products or components manufactured by companies other than VWS (UK) Ltd. or its affiliates

("Non - VWS (UK) Ltd. products") are covered by the warranty, if any, extended by the Product manufacturer. VWS (UK) Ltd. hereby assigns to the purchaser any such warranty; however VWS (UK) LTD. EXPRESSLY DISCLAIMS ANY WARRANTY WHETHER EXPRESSED OR IMPLIED, THAT THE NON - VWS (UK) Ltd. PRODUCTS ARE MERCHANTABLE OR FIT FOR A PARTICULAR PURPOSE.

NOTICE

VWS (UK) Ltd. is constantly striving to improve its products and services. Consequently, the information in this document is subject to change without notice and should not be construed as a commitment by VWS (UK) Ltd.

Also VWS (UK) Ltd. assumes no responsibility for any errors that may appear in this document. This manual is believed to be complete and accurate at the time of publication. In no event shall VWS (UK) Ltd. be liable for incidental or consequential damages in connection with or arising from the use of this manual.

VWS (UK) Ltd. warrants its products against defects in materials and workmanship as described in the Warranty statement on the preceding pages.

**WARNING!**
**DO NOT USE - SANITIZATION IN-PROGRESS ,CONTAINS COLD WATER STERILANT.**

**WARNING!**
**DO NOT USE - SANITIZATION IN-PROGRESS ,CONTAINS COLD WATER STERILANT.**

**WARNING!**
**DO NOT USE - SANITIZATION IN-PROGRESS ,CONTAINS COLD WATER STERILANT.**

The Labwater Specialists



**Tel: +44 203 567 7300 Email: info@elgalabwater.com Web: www.elgalabwater.com**